The Application of Broadband Constant Beamwidth Transducer (CBT) Theory to Loudspeaker Arrays

D. B. (DON) KEELE, JR.

Principle Consultant

DBK Associates and Labs

Bloomington, IN, USA

www.DBKeele.com

(AES Paper Presented Sept. 2000)

Outline

- Overview of Constant Beamwidth Transducer Theory
  - Originally developed for underwater sound by the military
  - Shaded circular spherical caps
- Computer Simulation of 3D Sound Radiation
  - Beamwidth, directivity, loss, polars, footprints
- Application to Point-Source Arrays
  - Straight lines, circular lines, spherical caps, toroidal caps
- Conclusions

Outline

- Overview of Constant Beamwidth Transducer Theory
  - Originally developed for underwater sound by the military
  - Shaded circular spherical caps
- Computer Simulation of 3D Sound Radiation
  - Beamwidth, directivity, loss, polars, footprints
- Application to Point-Source Arrays
  - Straight lines, circular lines, spherical caps, toroidal caps
- Conclusions

Outline

- Overview of Constant Beamwidth Transducer Theory
  - Originally developed for underwater sound by the military
  - Shaded circular spherical caps
- Computer Simulation of 3D Sound Radiation
  - Beamwidth, directivity, loss, polars, footprints
- Application to Point-Source Arrays
  - Straight lines, circular lines, spherical caps, toroidal caps
- Conclusions

Outline

- Overview of Constant Beamwidth Transducer Theory
  - Originally developed for underwater sound by the military
  - Shaded circular spherical caps
- Computer Simulation of 3D Sound Radiation
  - Beamwidth, directivity, loss, polars, footprints
- Application to Point-Source Arrays
  - Straight lines, circular lines, spherical caps, toroidal caps
- Conclusions

Overview of Constant Beamwidth Transducer Theory

- First formulated in JASA papers published in 1978 and 1983 describing underwater transducers based on shaded spherical caps.
  - [1] W. J. Trott, "Design Theory for a Constant-Beamwidth Transducer," Naval Research Laboratory Report 7933 (1975 Sept.)
  - [2] P. H. Rogers, and A. L. Van Buren, "New Approach to a Constant Beamwidth Transducer," *J. Acous. Soc. Am.*, vol. 64, no. 1, pp. 38-43 (1978 July).
  - [3] J. Jarzynski, and W. J. Trott, "Array Shading for a Broadband Constant Directivity Transducers," *J. Acous. Soc. Am.*, vol. 64, no. 5, pp. 1266-1269 (1978 Nov.).
  - [4] A. L. Van Buren, L. D. Luker, M. D. Jevnager, and A. C. Tims, "Experimental Constant Beamwidth Transducer," *J. Acous. Soc. Am.*, vol. 73, no. 6, pp. 2200-2209 (1983 June).

Overview of Constant Beamwidth Transducer Theory

- First formulated in JASA papers published in 1978 and 1983 describing underwater transducers based on shaded spherical caps.
  - [1] W. J. Trott, "Design Theory for a Constant-Beamwidth Transducer," Naval Research Laboratory Report 7933 (1975 Sept.)
  - [2] P. H. Rogers, and A. L. Van Buren, "New Approach to a Constant Beamwidth Transducer," *J. Acous. Soc. Am.*, vol. 64, no. 1, pp. 38-43 (1978 July).
  - [3] J. Jarzynski, and W. J. Trott, "Array Shading for a Broadband Constant Directivity Transducers," *J. Acous. Soc. Am.*, vol. 64, no. 5, pp. 1266-1269 (1978 Nov.).
  - [4] A. L. Van Buren, L. D. Luker, M. D. Jevnager, and A. C. Tims, "Experimental Constant Beamwidth Transducer," *J. Acous. Soc. Am.*, vol. 73, no. 6, pp. 2200-2209 (1983 June).

Overview of Constant Beamwidth Transducer Theory

- First formulated in JASA papers published in 1978 and 1983 describing underwater transducers based on shaded spherical caps.
  - [1] W. J. Trott, "Design Theory for a Constant-Beamwidth Transducer," Naval Research Laboratory Report 7933 (1975 Sept.)
  - [2] P. H. Rogers, and A. L. Van Buren, "New Approach to a Constant Beamwidth Transducer," *J. Acous. Soc. Am.*, vol. 64, no. 1, pp. 38-43 (1978 July).
  - [3] J. Jarzynski, and W. J. Trott, "Array Shading for a Broadband Constant Directivity Transducers," *J. Acous. Soc. Am.*, vol. 64, no. 5, pp. 1266-1269 (1978 Nov.).
  - [4] A. L. Van Buren, L. D. Luker, M. D. Jevnager, and A. C. Tims, "Experimental Constant Beamwidth Transducer," *J. Acous. Soc. Am.*, vol. 73, no. 6, pp. 2200-2209 (1983 June).

Overview of Constant Beamwidth Transducer Theory

- First formulated in JASA papers published in 1978 and 1983 describing underwater transducers based on shaded spherical caps.
  - [1] W. J. Trott, "Design Theory for a Constant-Beamwidth Transducer," Naval Research Laboratory Report 7933 (1975 Sept.)
  - [2] P. H. Rogers, and A. L. Van Buren, "New Approach to a Constant Beamwidth Transducer," *J. Acous. Soc. Am.*, vol. 64, no. 1, pp. 38-43 (1978 July).
  - [3] J. Jarzynski, and W. J. Trott, "Array Shading for a Broadband Constant Directivity Transducers," *J. Acous. Soc. Am.*, vol. 64, no. 5, pp. 1266-1269 (1978 Nov.).
  - [4] A. L. Van Buren, L. D. Luker, M. D. Jevnager, and A. C. Tims, "Experimental Constant Beamwidth Transducer," *J. Acous. Soc. Am.*, vol. 73, no. 6, pp. 2200-2209 (1983 June).

Spherical Cap Transducers

Overview

- 100° Circular Spherical Cap

Oblique View

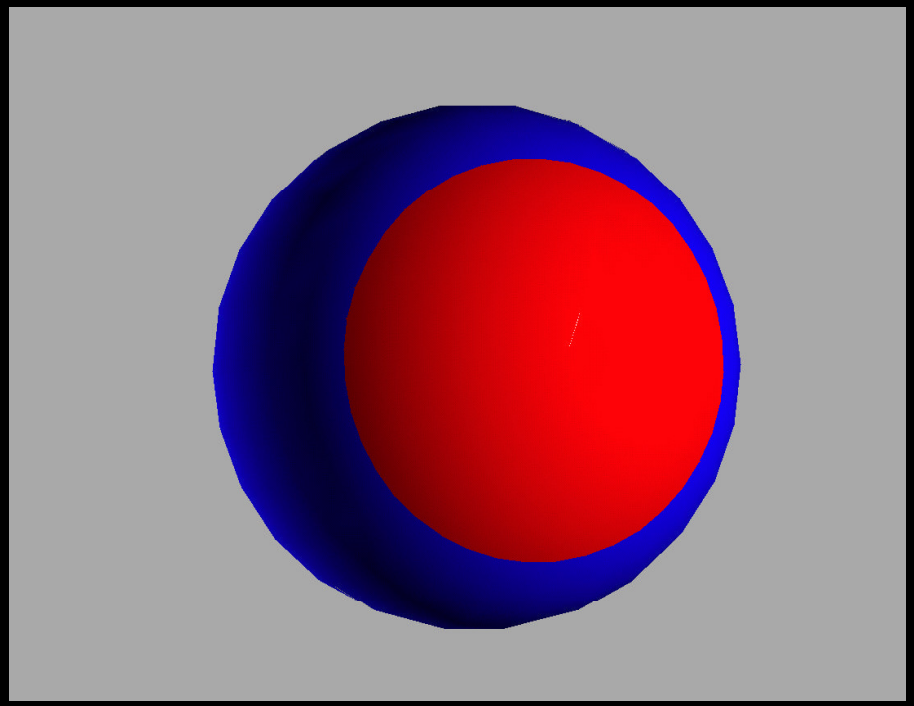

Side View

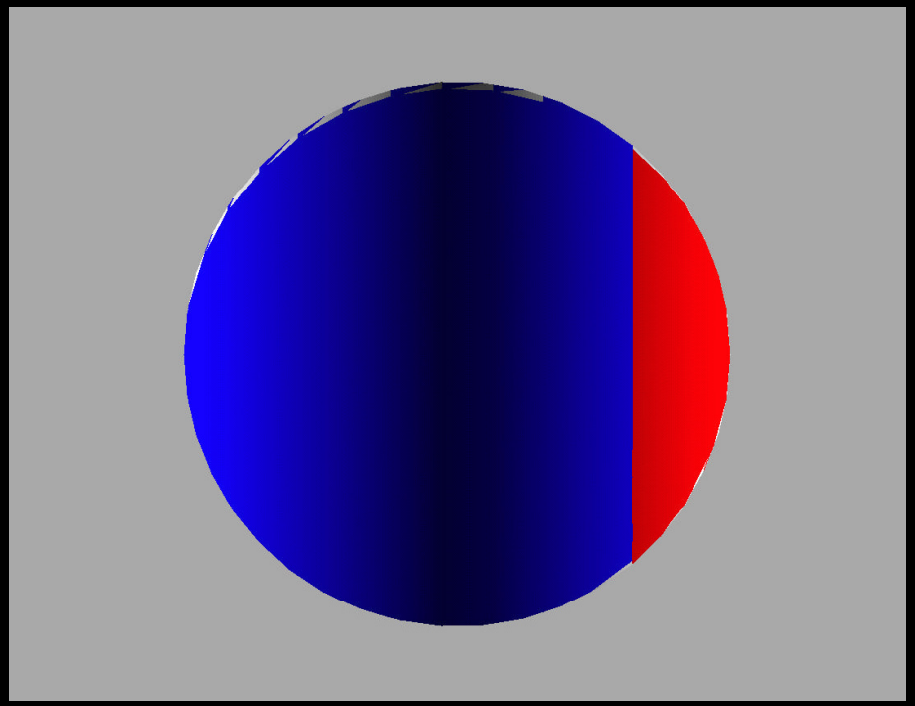

Shaded Spherical Cap

Overview Cont.

- Legendre Function Shading

$$u(\theta) = \begin{cases} P_v(\cos\theta) & \text{for} \quad \theta \le \theta_0 \\ 0 & \text{for} \quad \theta > \theta_0 \end{cases}$$

where

$u(\theta)$ = radial velocity distribution

θ = elevation angle in spherical coordinates,

($\theta = 0$ is center of circular spherical cap)

θ_0 = half angle of spherical cap

$P_v(x)$ = Legendre function of order v ($v > 0$) of argument x,

Shaded Spherical Cap

Overview Cont.

- Approximation to Farfield Pressure Pattern

$$p(\theta) \square \begin{cases} P_v(\cos\theta) & \text{for} \quad \theta \le \theta_0 \\ 0 & \text{for} \quad \theta > \theta_0 \end{cases}$$

where

$p(\theta)$ = radial pressure distribution.

- QED: Surface pressure distribution, nearfield pressure pattern, and farfield pressure pattern are all essentially the same!!

Shaded Spherical Cap

Overview Cont.

- Velocity shading functions for Legendre orders of $v = 5$, 7.5, and 10. (Reproduced from Rogers and Van Buren)

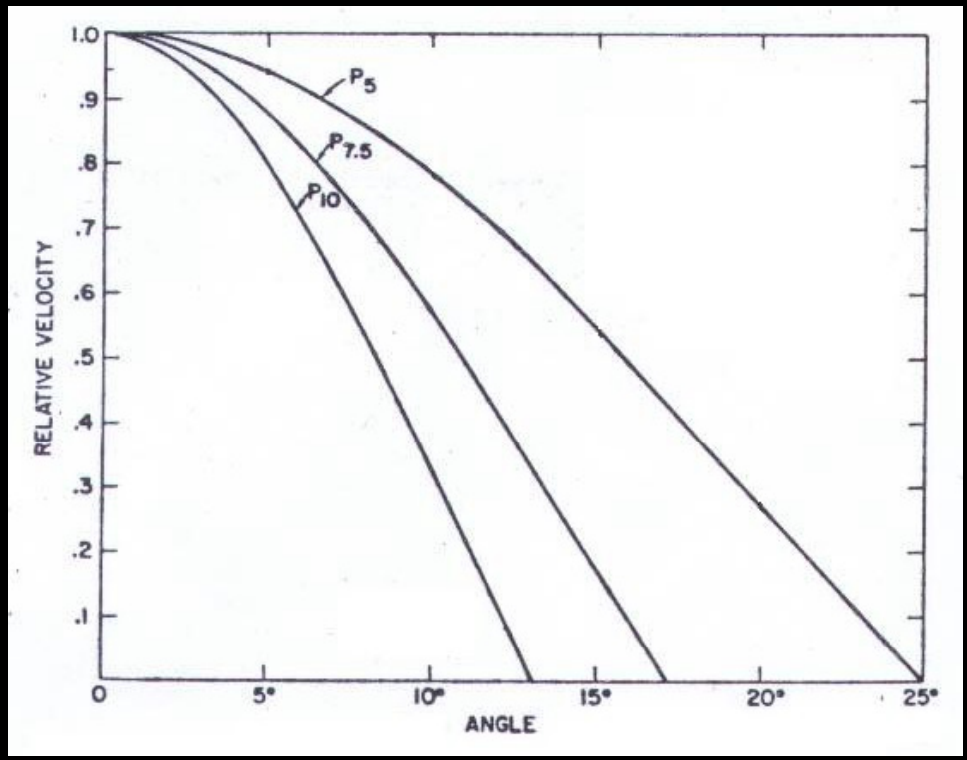

Shaded Spherical Cap

Overview Cont.

- Power Series Approximation of Legendre Shading Function (Keele)

$$U(x) \approx \begin{cases} 1 + 0.066x - 1.8x^2 + 0.743x^3 & \text{for} \quad x \le 1 \\ 0 \quad \text{for} \quad x > 1 \end{cases}$$

where

$$x = \text{normalized angle} \left(\frac{\theta}{\theta_0} \right)$$

Shaded Spherical Cap

Overview Cont.

- Power Series Approximation of Legendre Shading Function

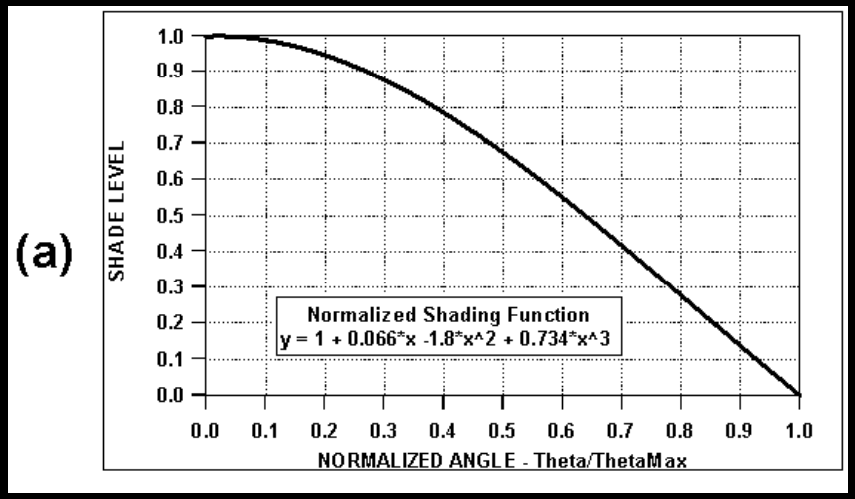

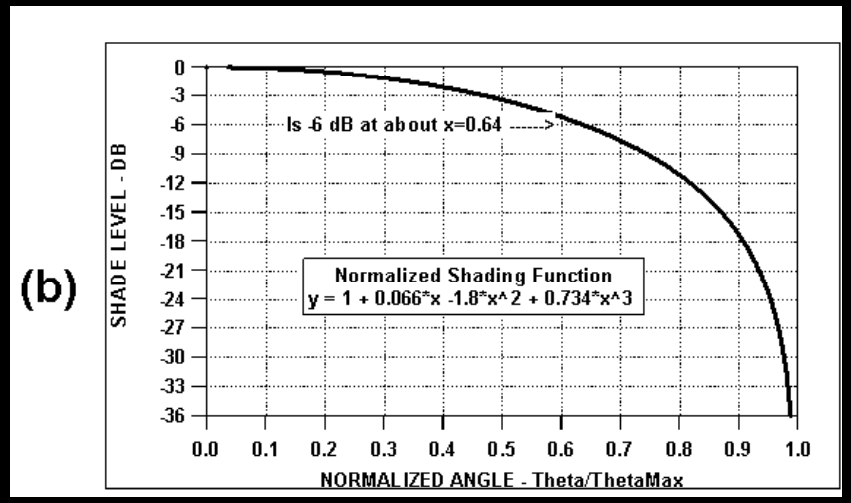

Shaded Spherical Cap

Overview Cont.

CBT Shading

Edge

Center

Edge

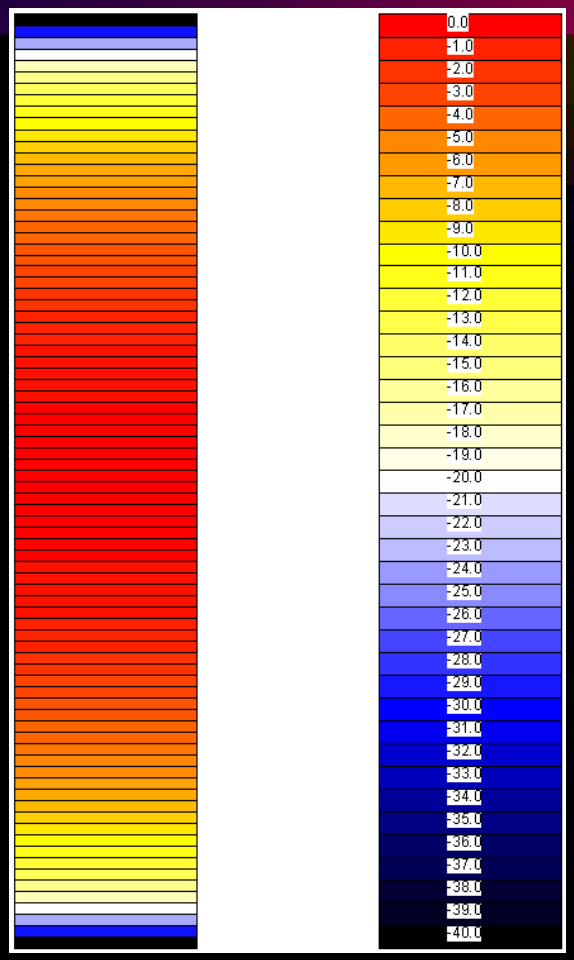

0

-10

-20

-30

-40

Level dB

CBT Shading Color Scale

Shaded Spherical Cap

Overview Cont.

- Don't need the rest of the sphere!!!

Rogers and Van Buren point out that because the surface pressure and velocity are nearly zero over the inactive part of the outside surface of the sphere, the part of the rigid spherical shell outside the spherical cap region can be removed without significantly changing the acoustic radiation. This means that the ideal constant beamwidth behavior of the spherical cap is retained even though the rest of the sphere is missing!

Shaded Spherical Cap

Overview Cont.

- Geometry of spherical cap constant-beamwidth transducers. (Reproduced from Rogers and Van Buren)

P_5 CBT 50° $P_{7.5}$ CBT 34° P_{10} CBT 26°

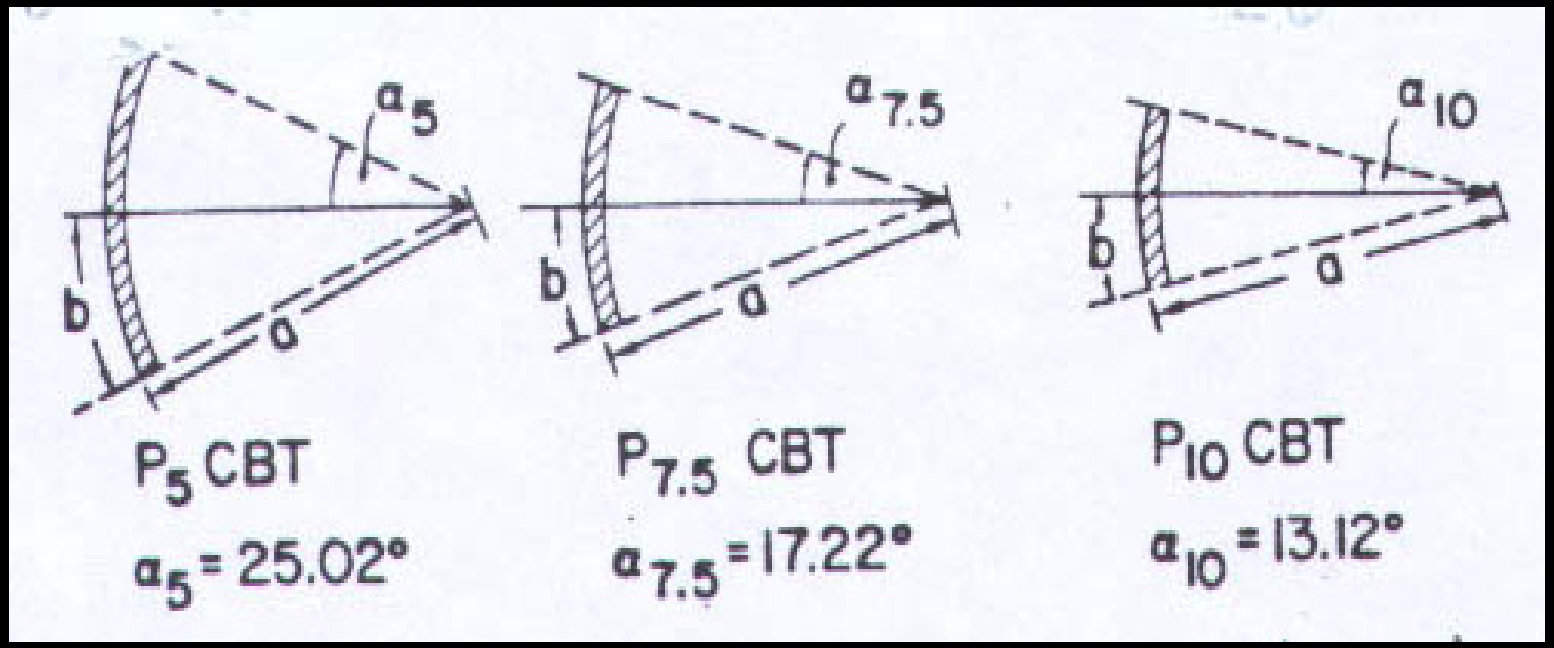

Shaded Spherical Cap

Overview Cont.

- CBT polar patterns (Reproduced from Rogers and Van Buren)

P_5 CBT

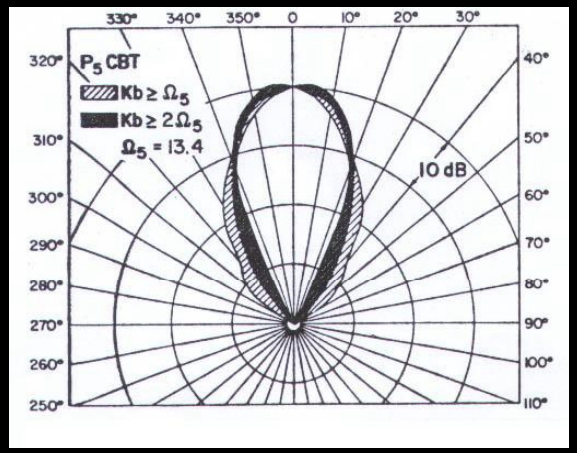

$P_{7.5}$ CBT

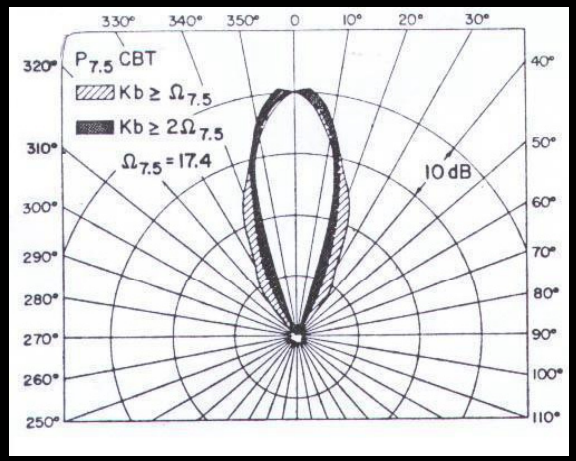

P_{10} CBT

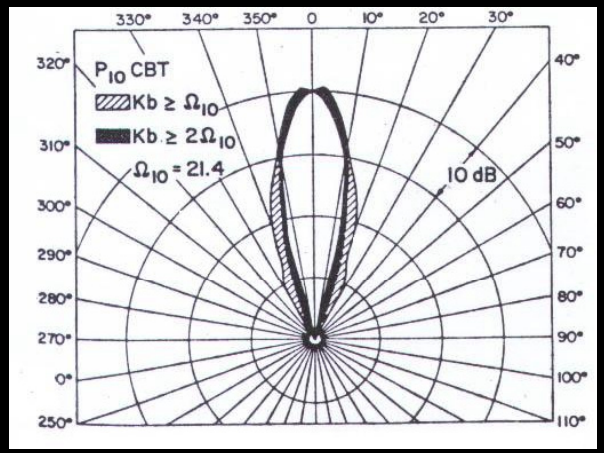

Computer Simulation of 3D Sound Radiation

- Types of output data
  - Beamwidth
  - Directivity
  - On-axis loss
  - Vertical and horizontal polars
  - Footprint plots

Computer Simulation of 3D Sound Radiation , Cont.

- Beamwidth Plots
  - Plot of 6-dB-down horizontal and vertical beamwidth angle at one-third-octave center frequencies

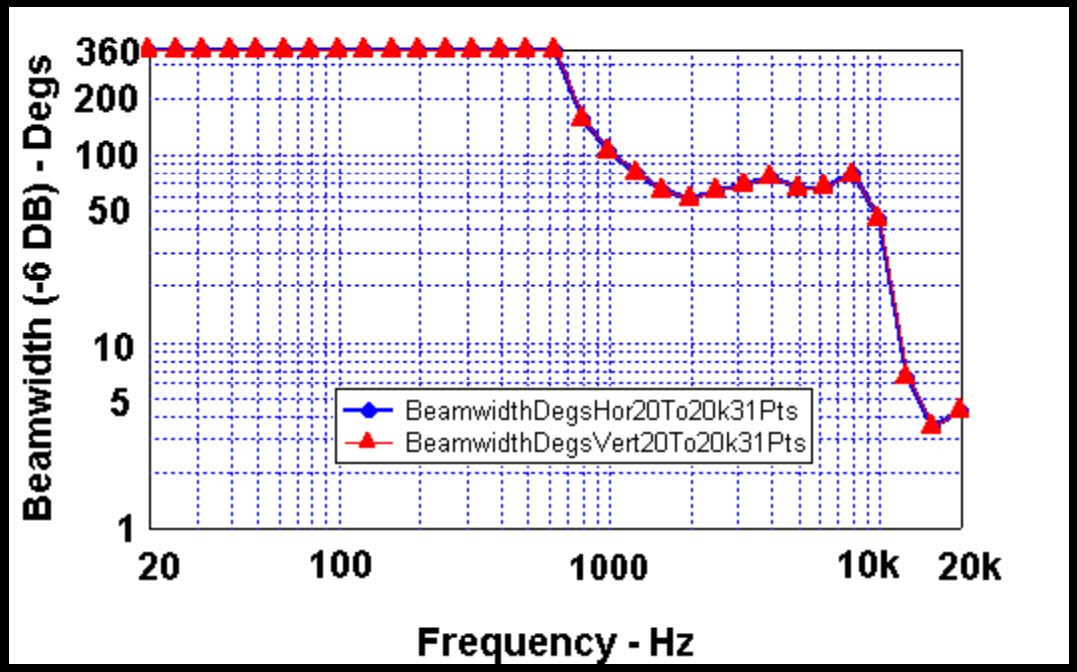

Shaded Spherical Cap Radiator:

100°

13.5” Dia.

7 Rings

121 Points

Computer Simulation of 3D Sound Radiation , Cont.

- Directivity Plots
  - Plot of full sphere directivity at one-third-octave center frequencies (834 point full-sphere calculation)

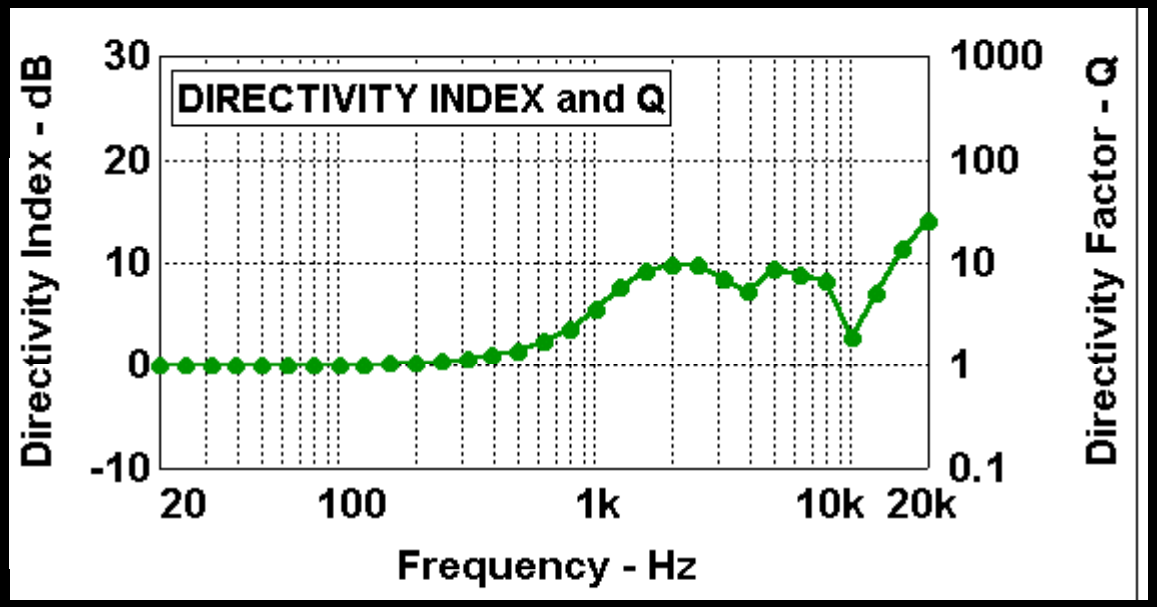

Computer Simulation of 3D Sound Radiation, Cont.

- On-Axis Loss
  - Plot of on-axis loss at one-third-octave center frequencies (Compares predicted on-axis response to on-axis response with all sources in phase at sample point)

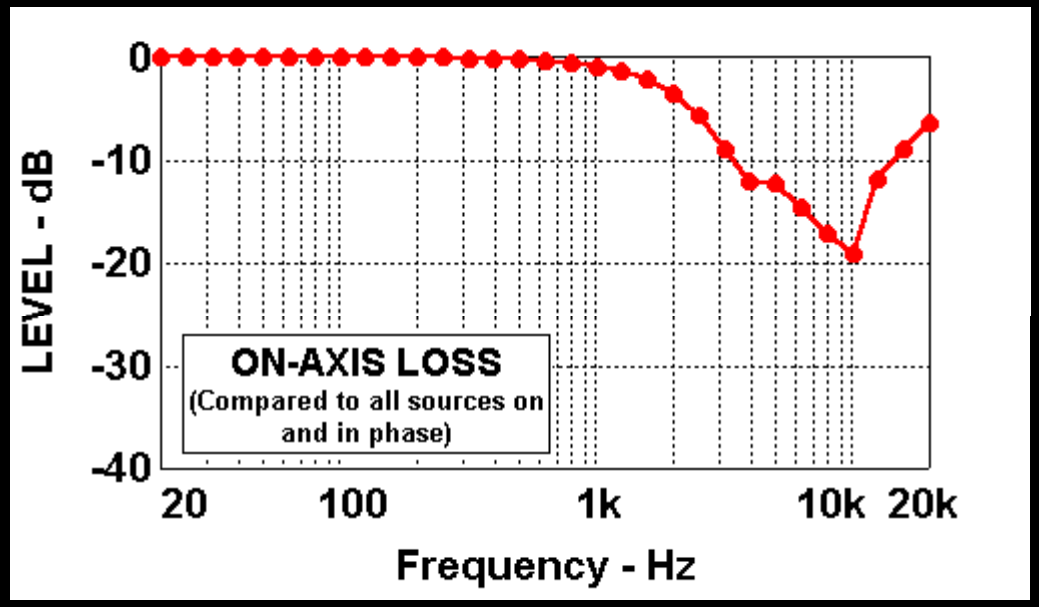

Computer Simulation of 3D Sound Radiation, Cont.

- Polars
  - Full circle horizontal and vertical polar plots at one-third-octave center frequencies (1° Increment)

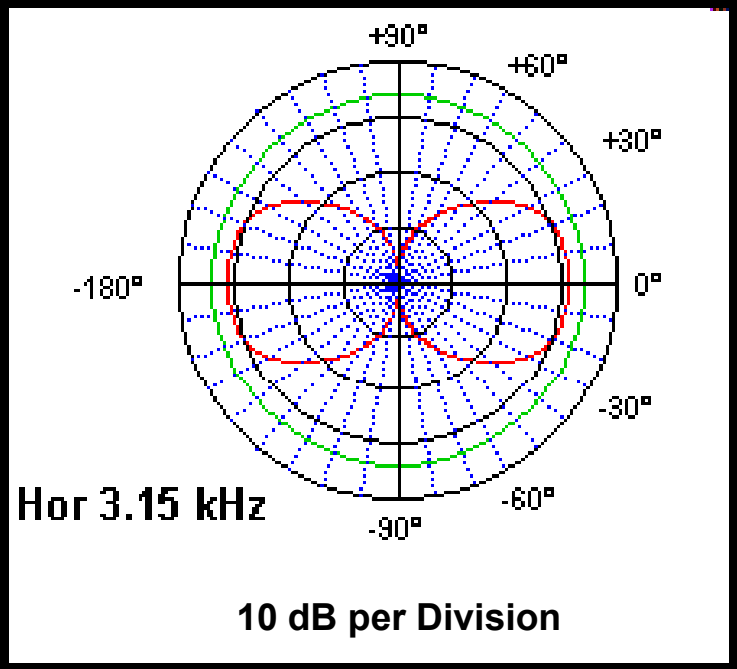

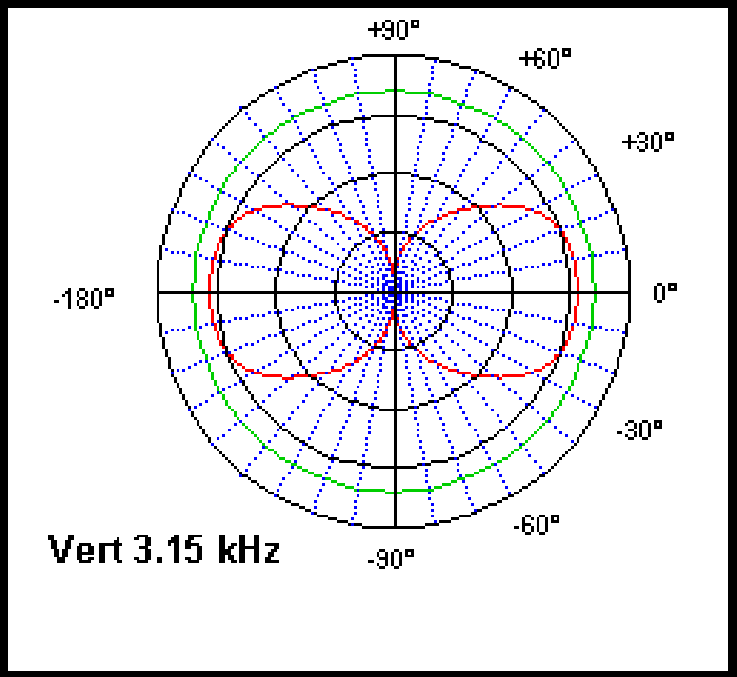

Computer Simulation of 3D Sound Radiation, Cont.

- Footprints
  - Footprint plot at each one-third-octave center freq.
    (120° V x 120° H or ±60° H x ±60°, calculated every 3°, 1681 points total)

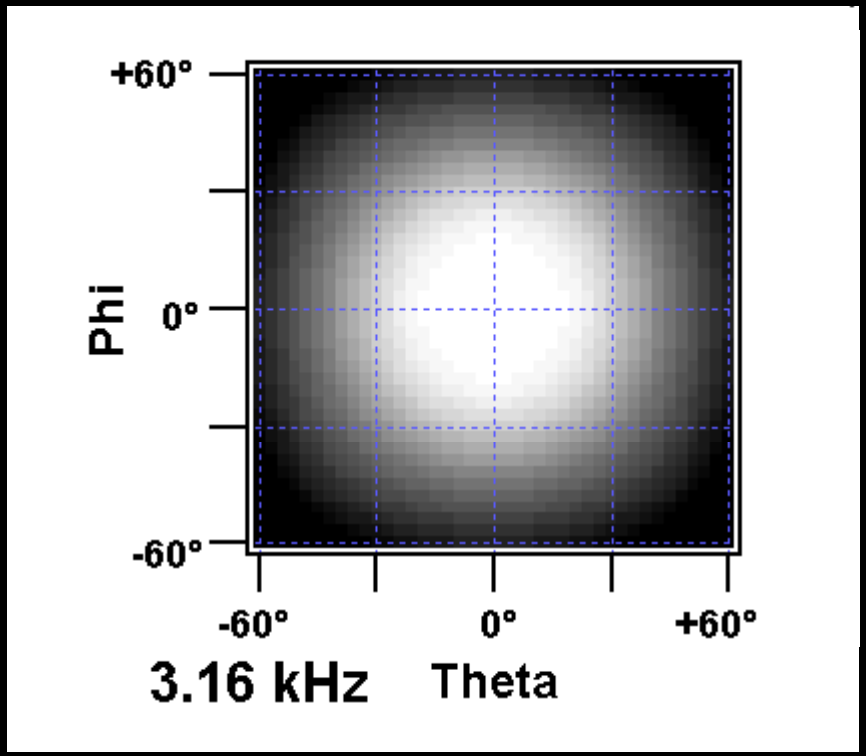

Application to Point-Source Arrays

- Types of point-source arrays simulated
  - Straight Line Source
  - Curved Line Source (Circular Wedge)
  - Circular Spherical Cap
  - Elliptical Toriodal Cap

Application to Point-Source Arrays Cont.

- Curved Line Source (Circular Wedge)
  - Example: 11-Point 100° Circular Line Array with Legendre Shading

FRONT VIEW

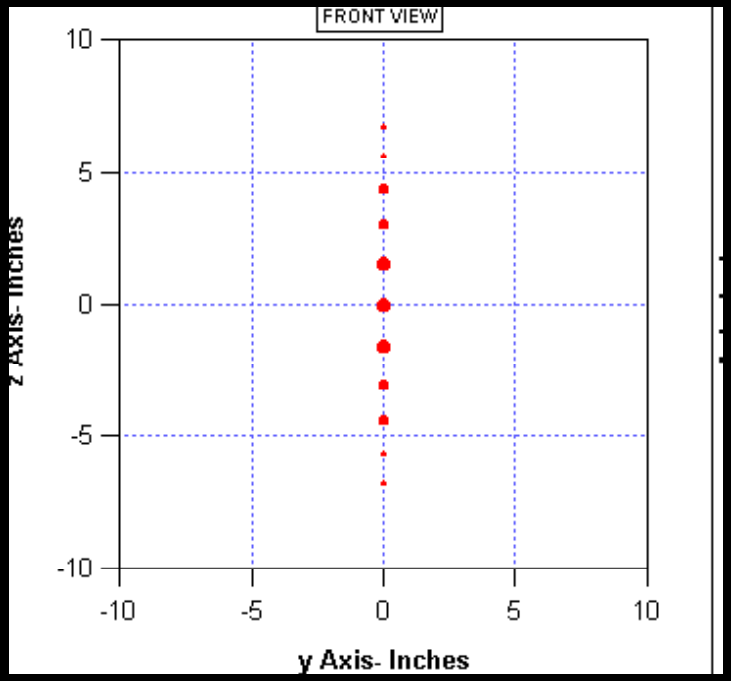

SIDE VIEW

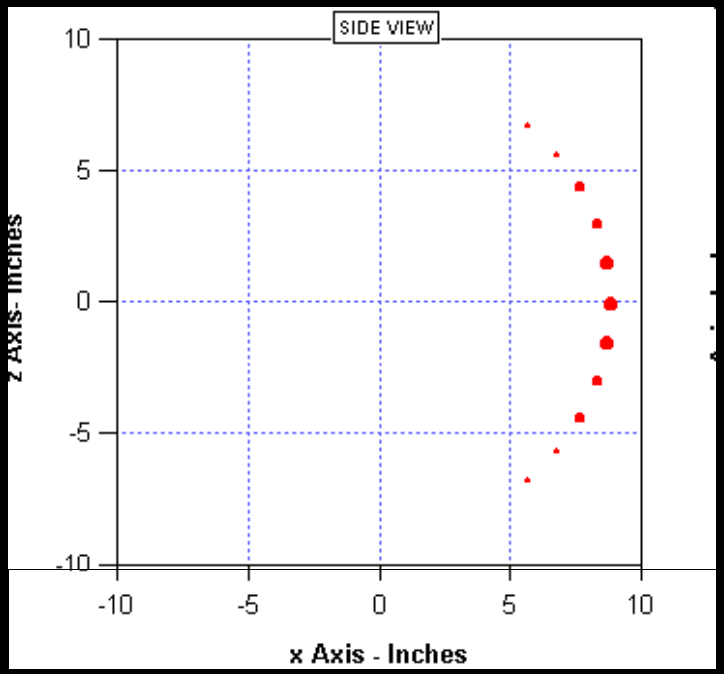

Application to Point-Source Arrays Cont.

- Curved Line Source (Circular Wedge)
  - Example: 11-Point 100° Circular Line Array with speakers rendered

FRONT VIEW

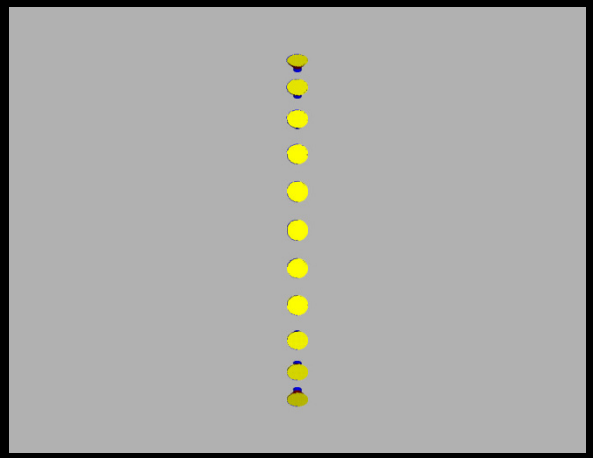

OBLIQUE VIEW

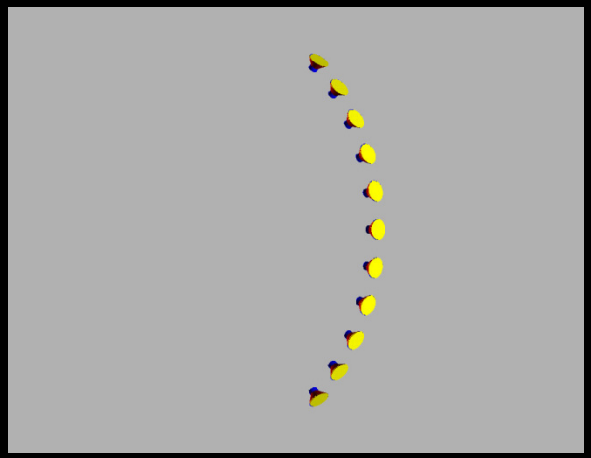

SIDE VIEW

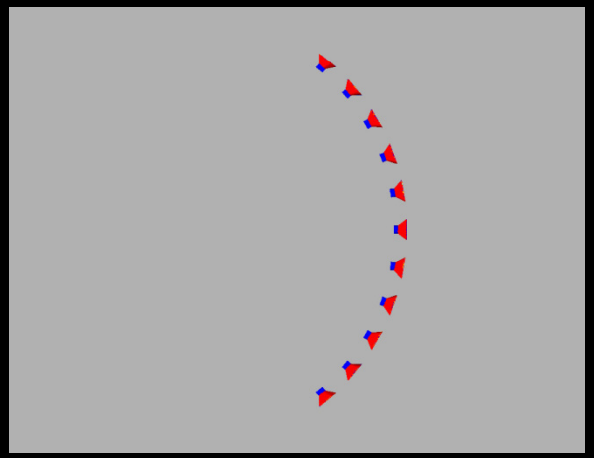

Application to Point-Source Arrays Cont.

- Circular Spherical Cap
  - Example: 121-Point 100° Circular Spherical Cap Array with Legendre Shading

FRONT VIEW

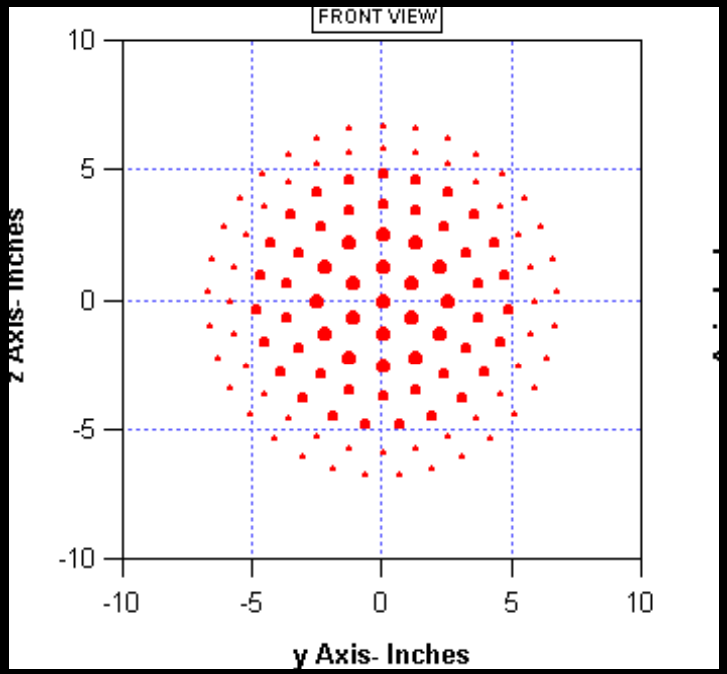

SIDE VIEW

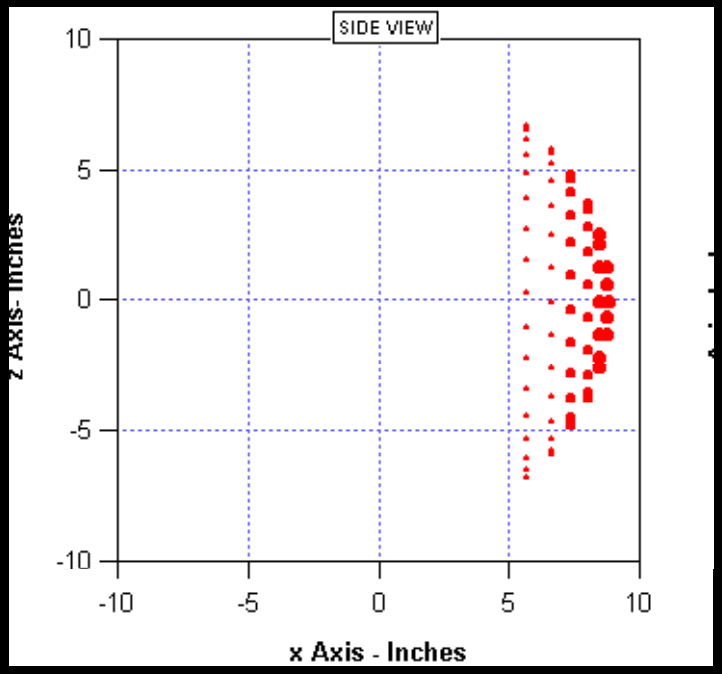

Application to Point-Source Arrays Cont

- 100° Hor. x 50° Vert. Elliptical Toroidal Cap

OBLIQUE VIEW

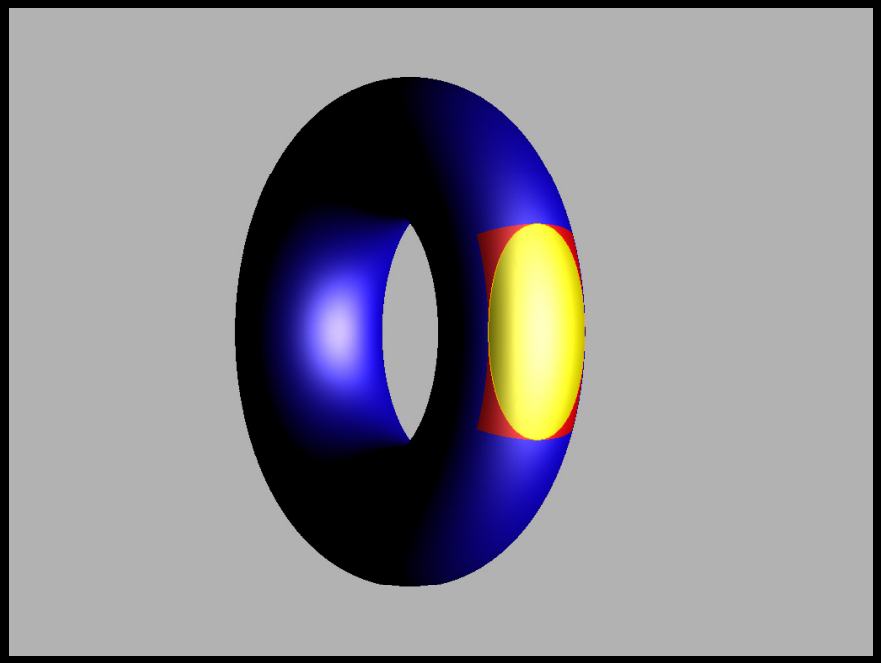

SIDE VIEW

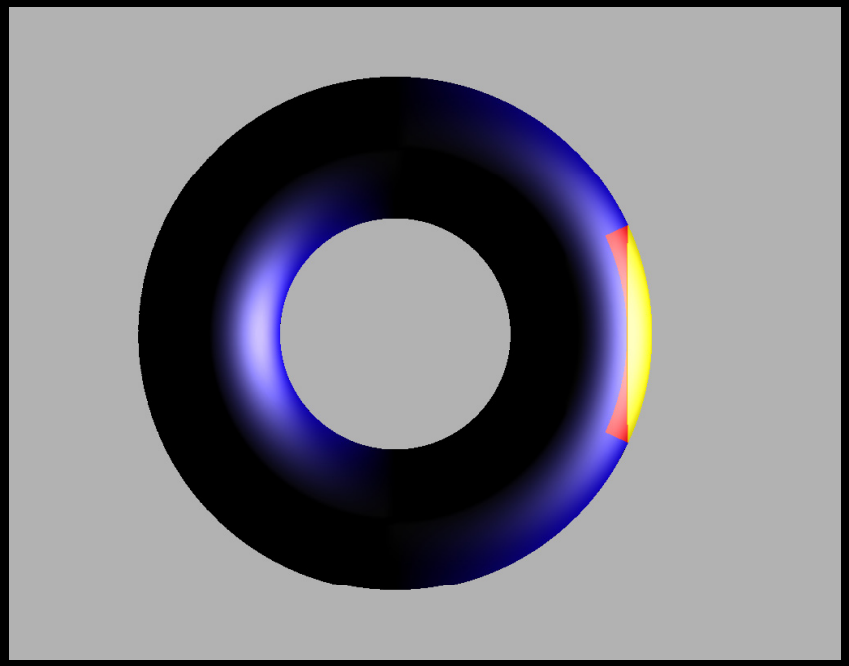

Application to Point-Source Arrays Cont.

- Elliptical Toriodal Cap, Layout of Sources

Procedure:

1. Unwrap rectangular region from torus.
2. Fill with rectangular grid of sources.
3. Superimpose an ellipse.
4. Retain sources inside ellipse.
5. Shade sources depending on distance from center.

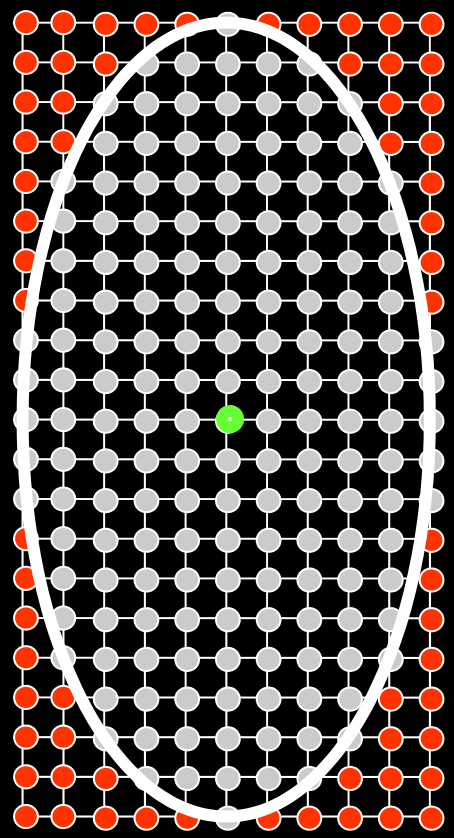

Application to Point-Source Arrays Cont.

- Elliptical Toriodal Cap
  - Example: 381-Point 100° x 50° Elliptical Toroidal Cap Array with Legendre Shading

FRONT VIEW

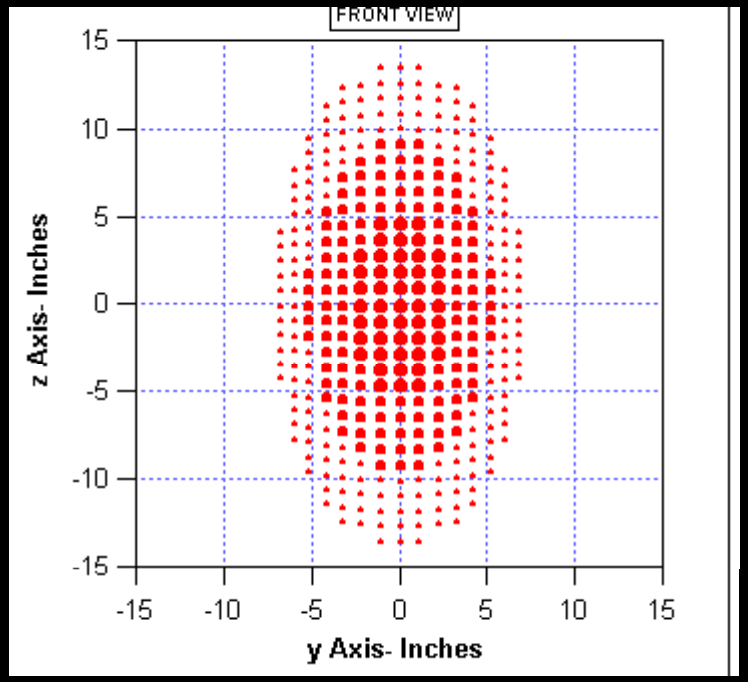

Application to Point-Source Arrays Cont.

- Elliptical Toriodal Cap Cont.
  - Example: 381-Point 100° x 50° Elliptical Toroidal Cap Array with Legendre Shading

TOP VIEW

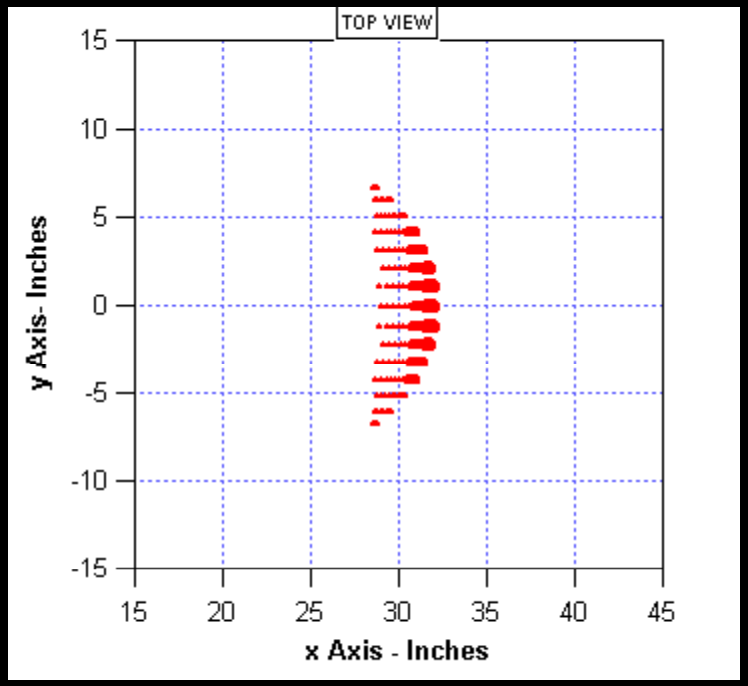

SIDE VIEW

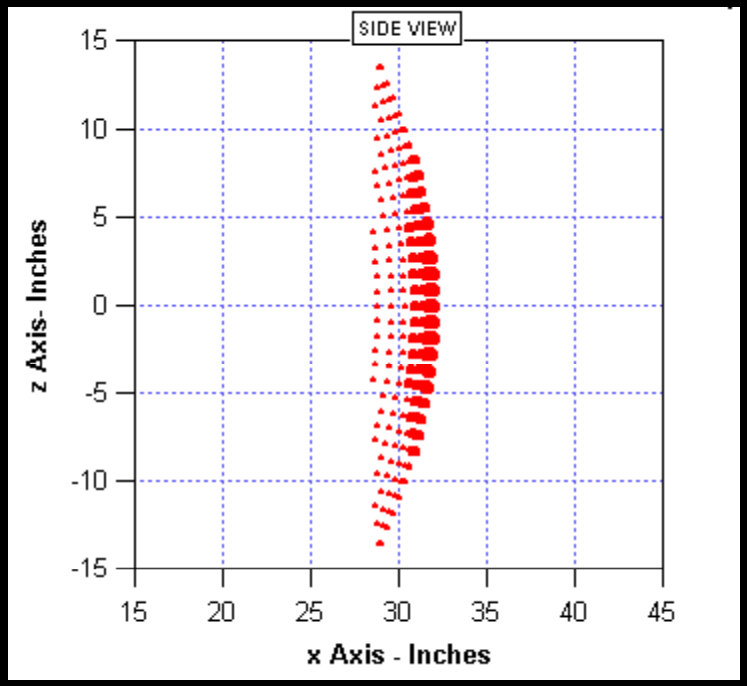

Application to Point-Source Arrays Cont.

- Various point-source arrays simulated

I analyzed many different point-source arrays using the analysis tools I developed. All results are in the preprint (in excruciating detail and too many pages!) I will just be covering the highlights of the results here.

Application to Point-Source Arrays Cont.

- Various point-source arrays simulated
  - Straight Line Array
    - 11 points, equal levels, 13.5” high (one wavelength at 1 kHz)
  - Curved Line Source (Circular Wedge)
    - 11 points, equal levels (no shading), 100°, 13.5” high
    - 21 points), 100°, 13.5” high
      - equal levels (no shading)
      - Legendre shading
      - 3 step shading (0, -6, and -12 dB)
      - 2 step shading (0, -6 dB)
    - 81 points, Legendre shading, 100°, 54” high (one wavelength at 250 Hz)

Application to Point-Source Arrays Cont.

- Various point-source arrays simulated, Cont.
  - Circular Spherical Cap
    - 121 points, Legendre shading, 100°, 13.5” dia., 6 concentric rings
    - 381 points, Legendre shading, 100°, 13.5” dia., 11 concentric rings
  - Elliptical Toriodal Cap
    - 372 points, Legendre shading, 100° H x 50° V, 27” H x 13.5” W

Simulation Results

- Straight Line Array
  - 11 points, equal levels, 13.5” high (one wavelength at 1 kHz)

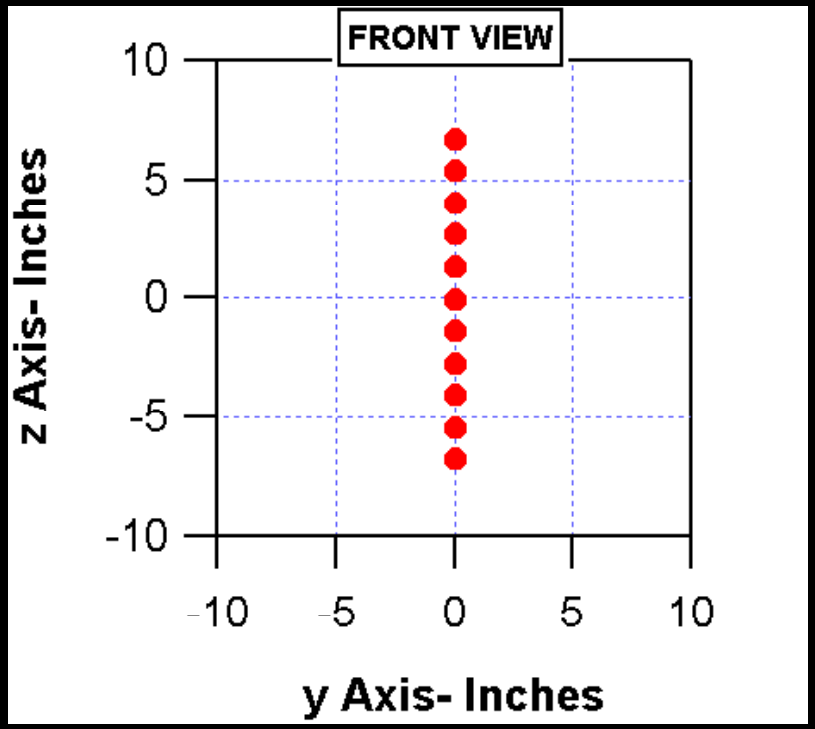

Simulation Results

- Straight Line Array
  - 11 points, equal levels, 13.5” high (one wavelength at 1 kHz)

BEAMWIDTH

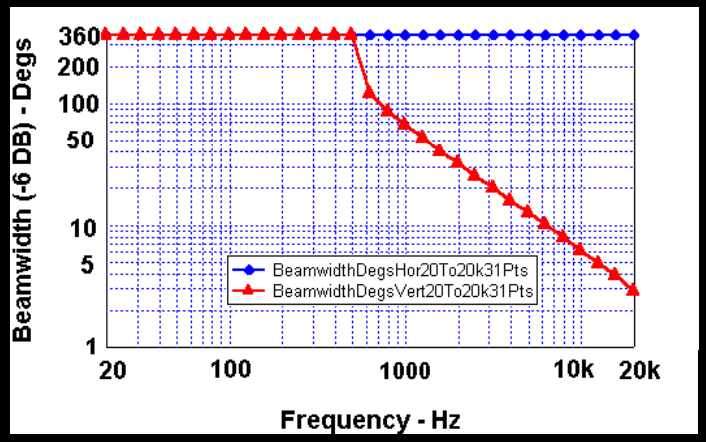

DIRECTIVITY

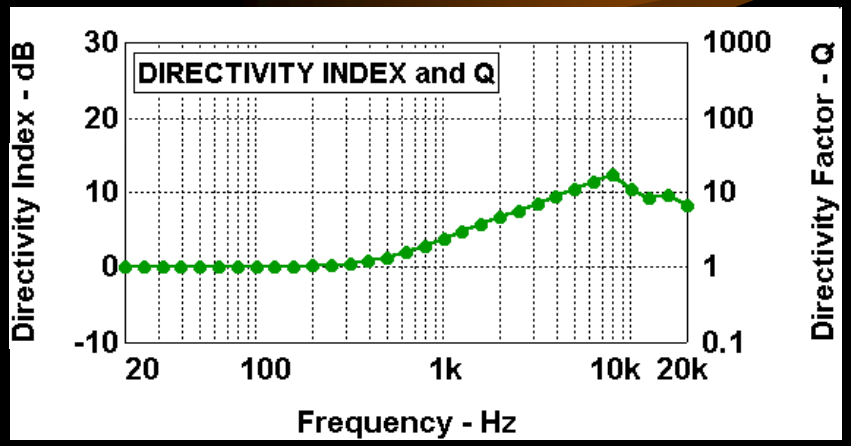

ON-AXIS LOSS

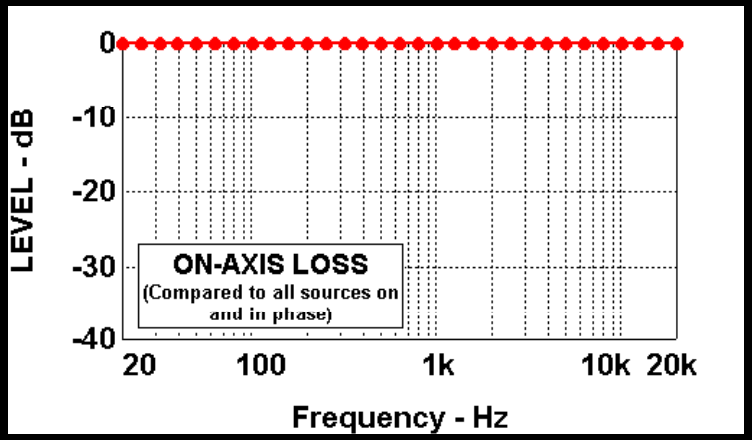

Simulation Results

- Straight Line Array
  - 11 points, equal levels, 13.5” high (one wavelength at 1 kHz)

DATA AT 3.15 kHz

HOR. POLAR

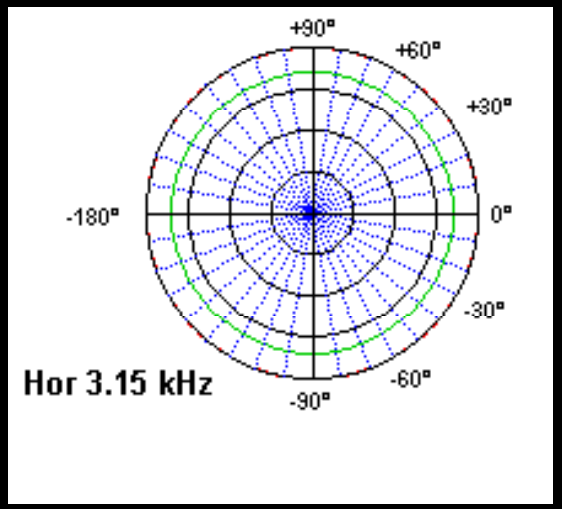

VERT. POLAR

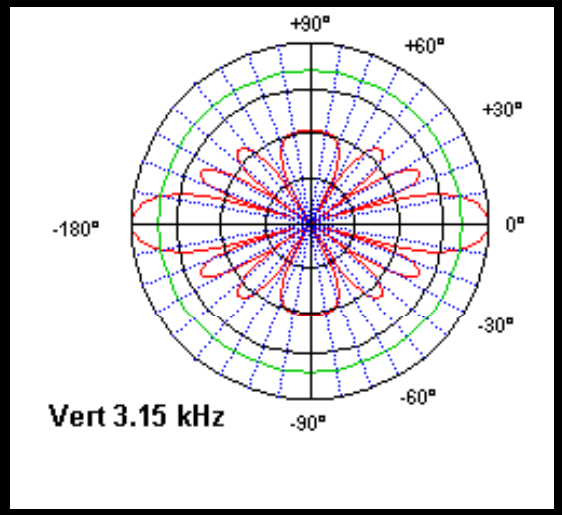

FOOTPRINT

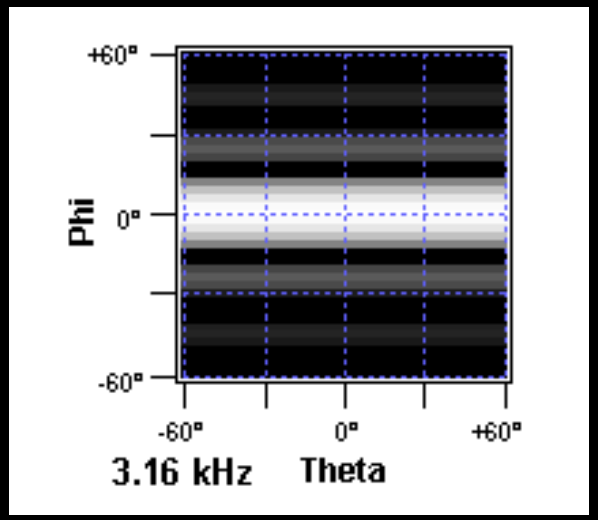

Simulation Results Cont.

- Curved Line Source (Circular Wedge)
  - 11 points, equal levels (no shading), 100°, 13.5” high
  - 21 points), 100°, 13.5” high
    - equal levels (no shading)
    - Legendre shading
    - 3 step shading (0, -6, and -12 dB)
    - 2 step shading (0, -6 dB)
  - 81 points, Legendre shading, 100°, 54” high (one wavelength at 250 Hz)

Simulation Results Cont.

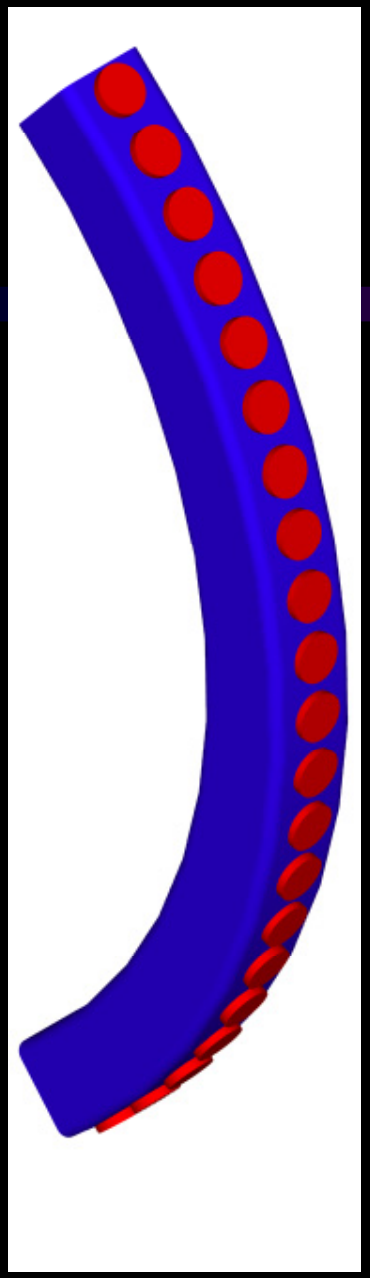

Curved Line Source
(Circular Wedge)

21 Sources,
100°,
One-wavelength high
at 1 kHz

(Both with and without shading!)

Simulation Results Cont.

- Curved Line Source (Circular Wedge)
  - 21 points), 100°, 13.5” high (one wavelength at 1 kHz)
    - equal levels (no shading)

BEAMWIDTH

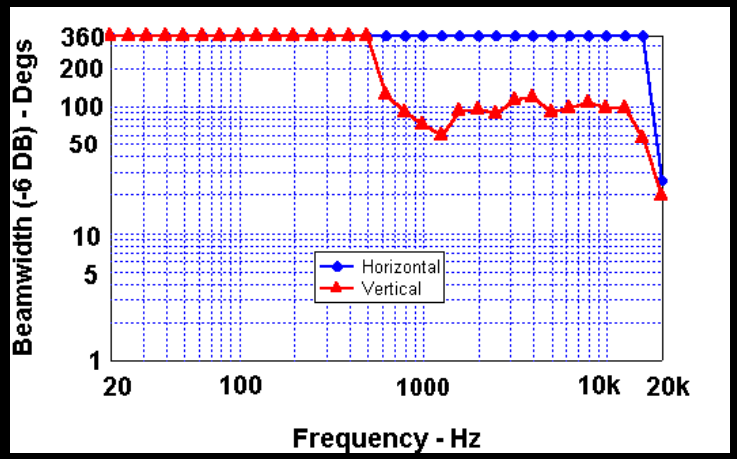

DIRECTIVITY

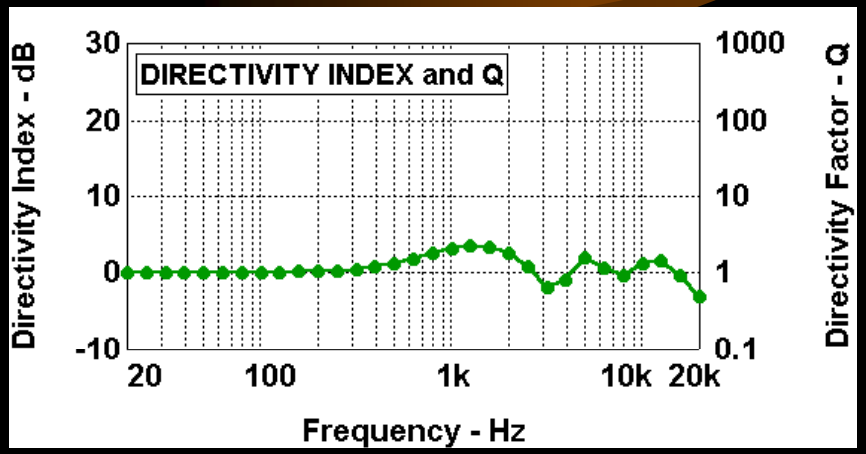

ON-AXIS LOSS

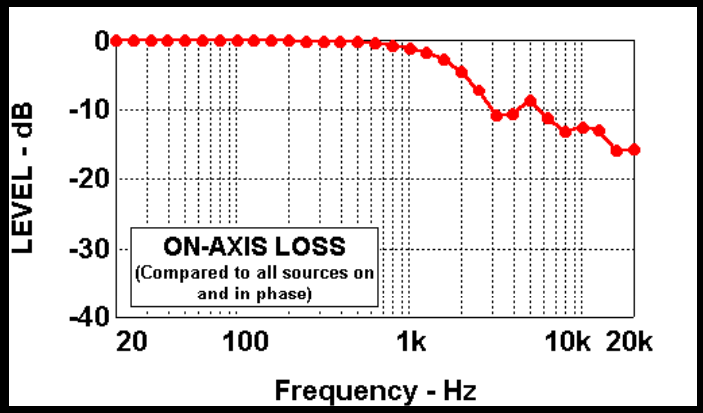

Simulation Results

- Curved Line Source (Circular Wedge)
  - 21 points), 100°, 13.5” high (one wavelength at 1 kHz)
    - equal levels (no shading)

DATA AT 3.15 kHz

HOR. POLAR

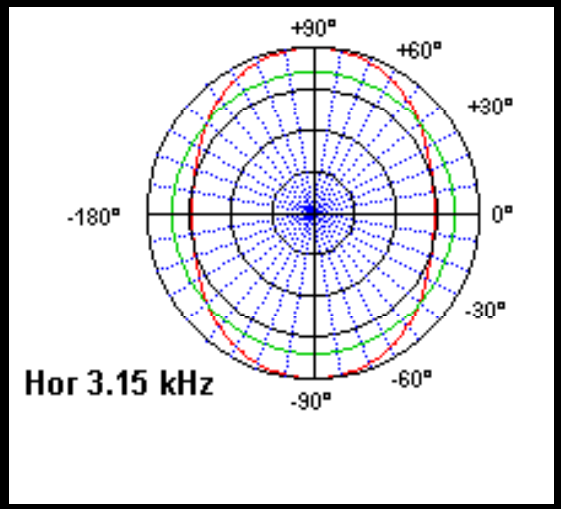

VERT. POLAR

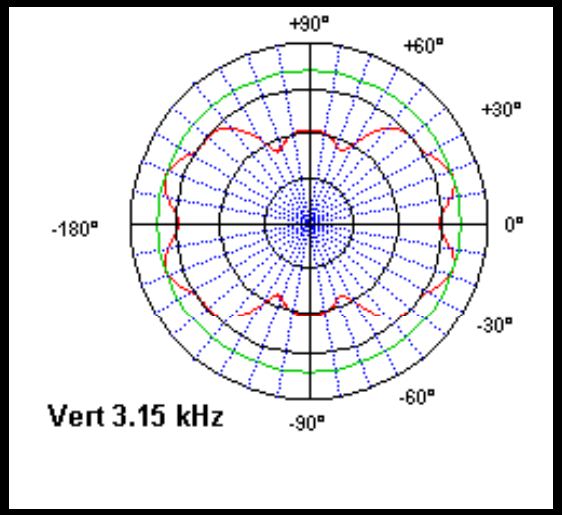

FOOTPRINT

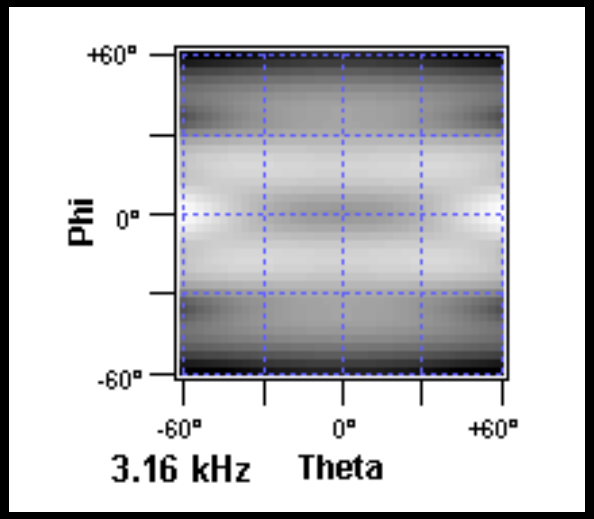

Simulation Results Cont.

- Curved Line Source (Circular Wedge)
  - 21 points), 100°, 13.5” high (one wavelength at 1 kHz)
    - Legendre shading

BEAMWIDTH

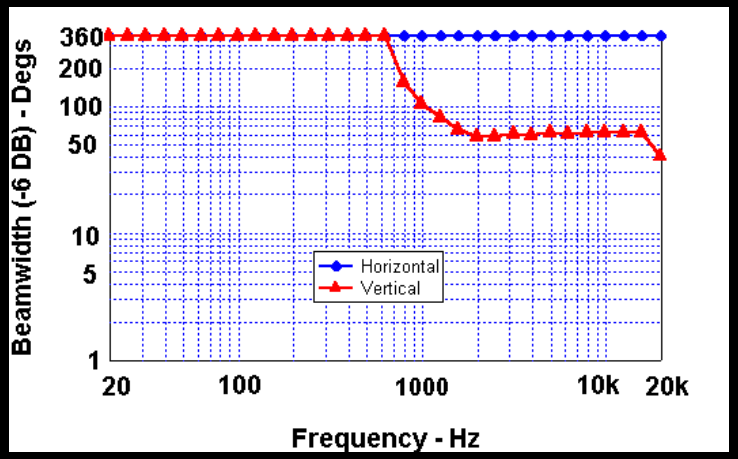

DIRECTIVITY

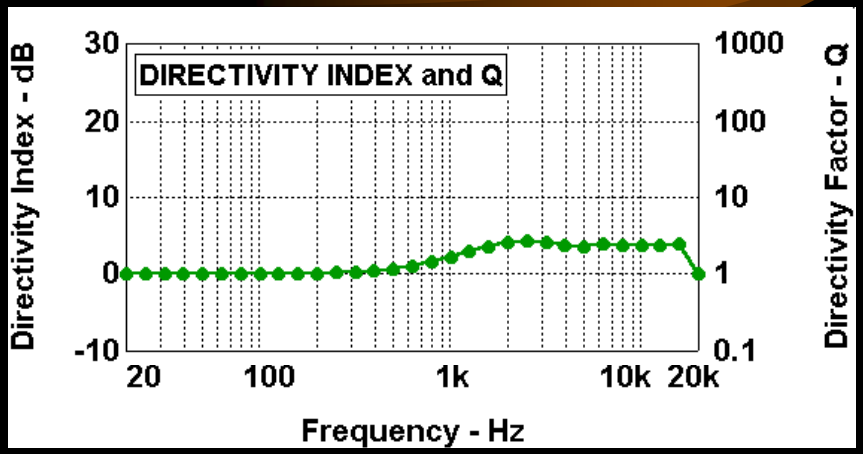

ON-AXIS LOSS

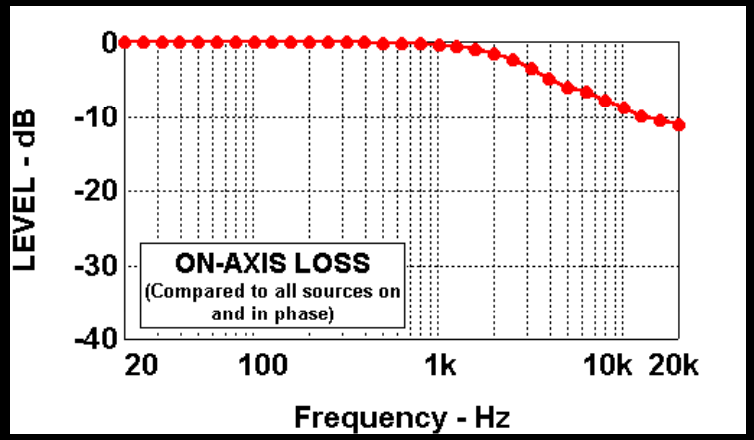

Simulation Results

- Curved Line Source (Circular Wedge)
  - 21 points), 100°, 13.5” high (one wavelength at 1 kHz)
    - Legendre shading

DATA AT 3.15 kHz

HOR. POLAR

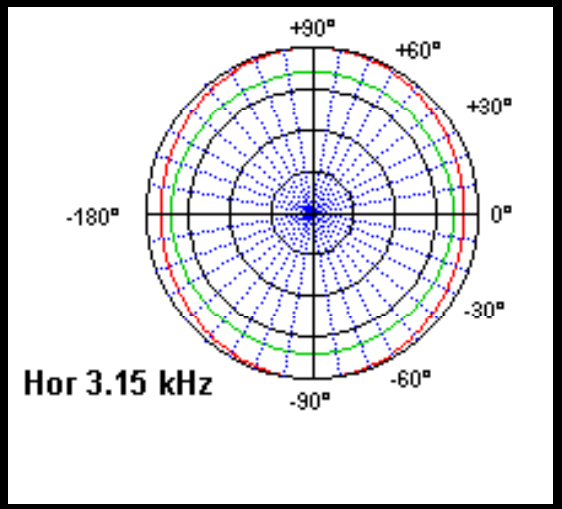

VERT. POLAR

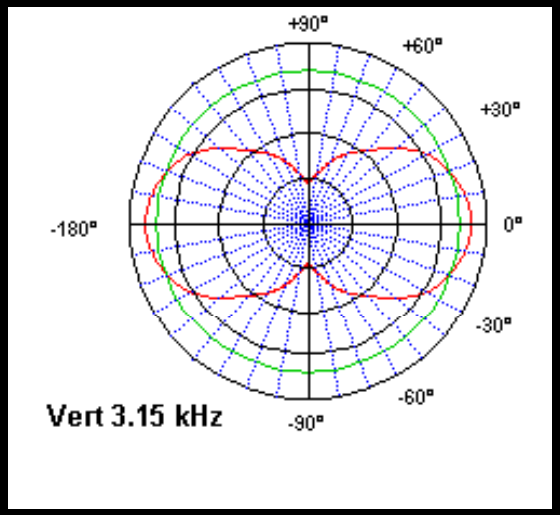

FOOTPRINT

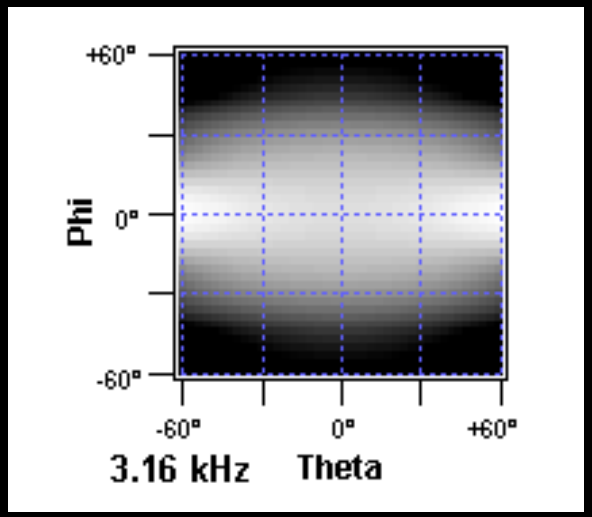

Simulation Results Cont.

- Curved Line Source (Circular Wedge)
  - 81 points, Legendre shading, 100°, 54" high (one wavelength at 250 Hz)

BEAMWIDTH

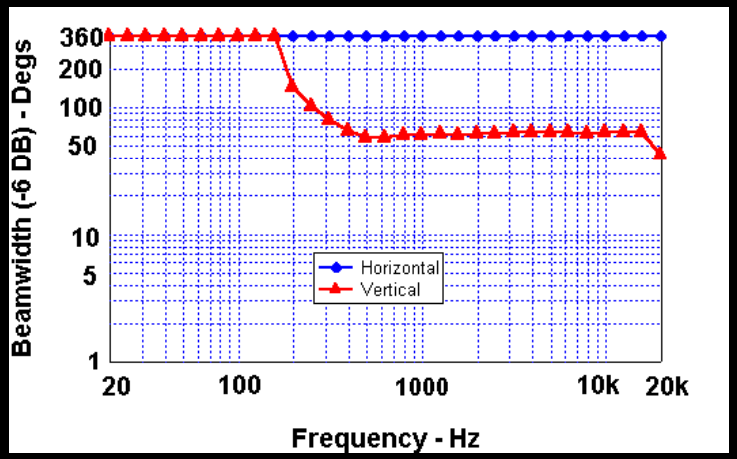

DIRECTIVITY

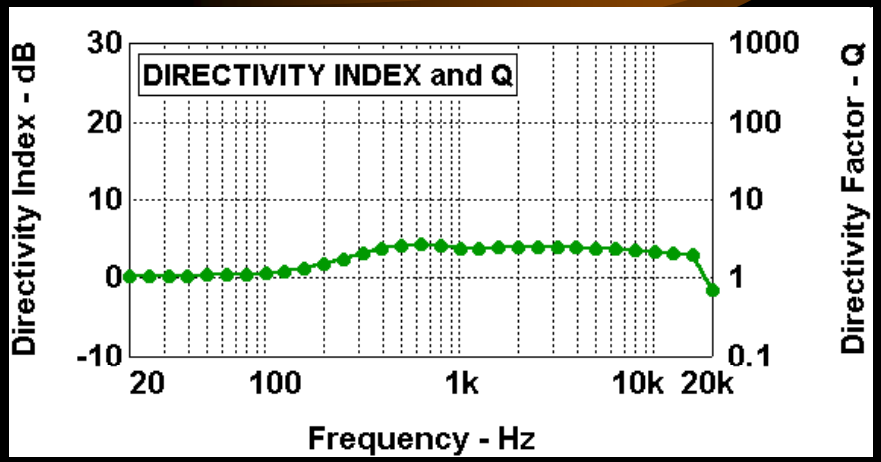

ON-AXIS LOSS

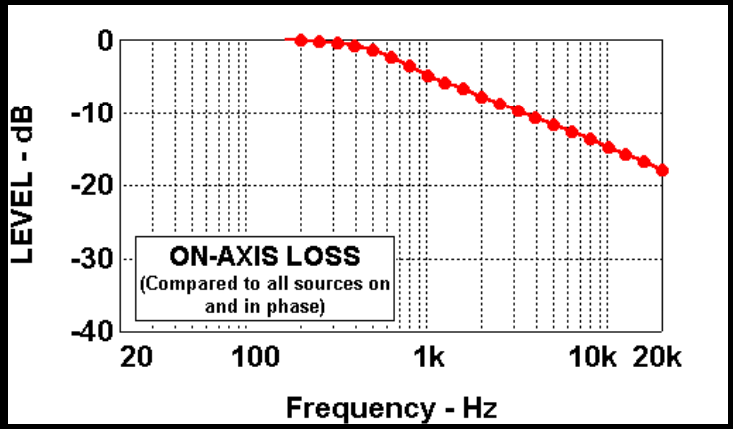

Simulation Results

- Curved Line Source (Circular Wedge)
  - 81 points, Legendre shading, 100°, 54” high (one wavelength at 250 Hz)

DATA AT 3.15 kHz

HOR. POLAR

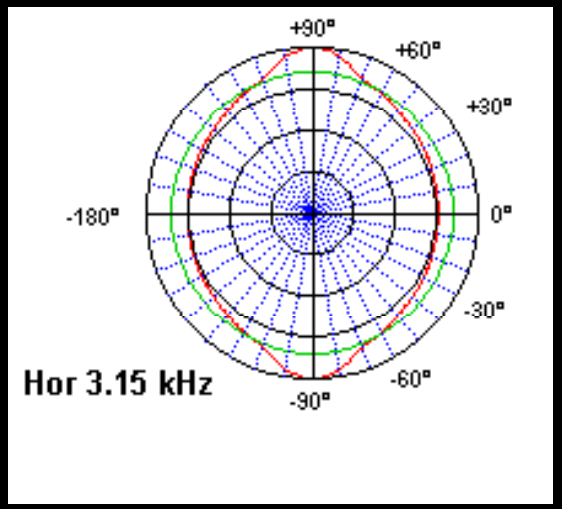

VERT. POLAR

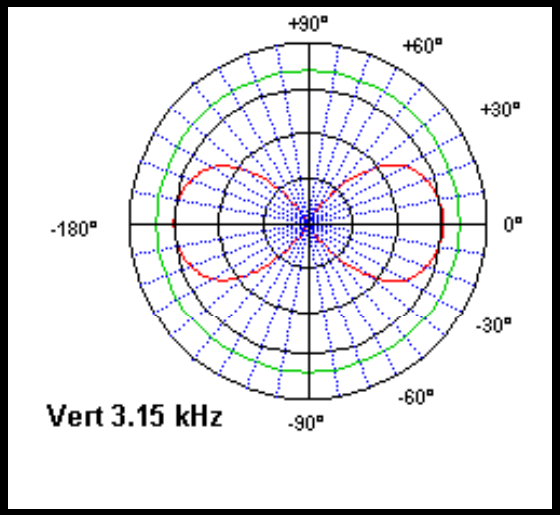

FOOTPRINT

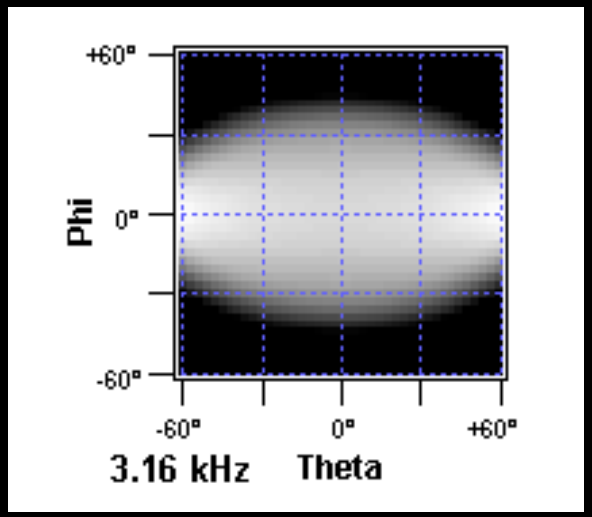

Simulation Results Cont.

- Circular Spherical Cap
  - 381 points, Legendre shading, 100°, 13.5” dia., 11 concentric rings

FRONT VIEW

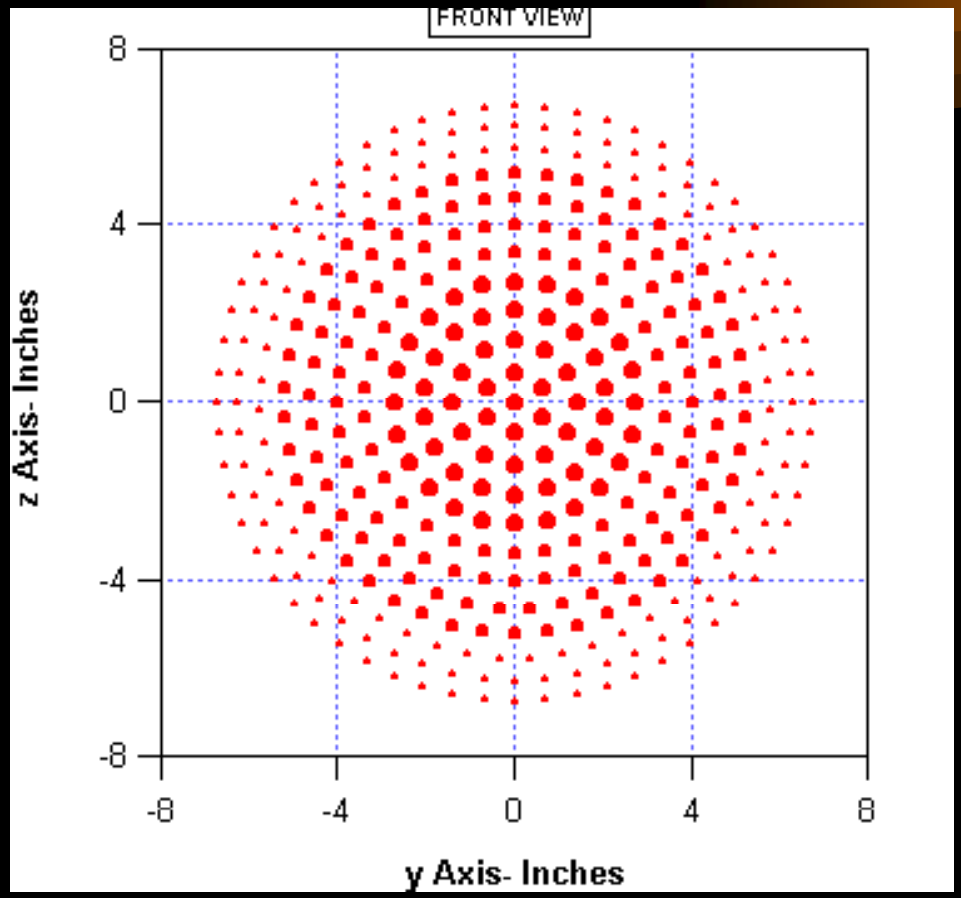

Circular Spherical Cap Array

381 Sources,
11 concentric rings,
100°,
One-wavelength diameter at 1 kHz
(Legendre Shading)

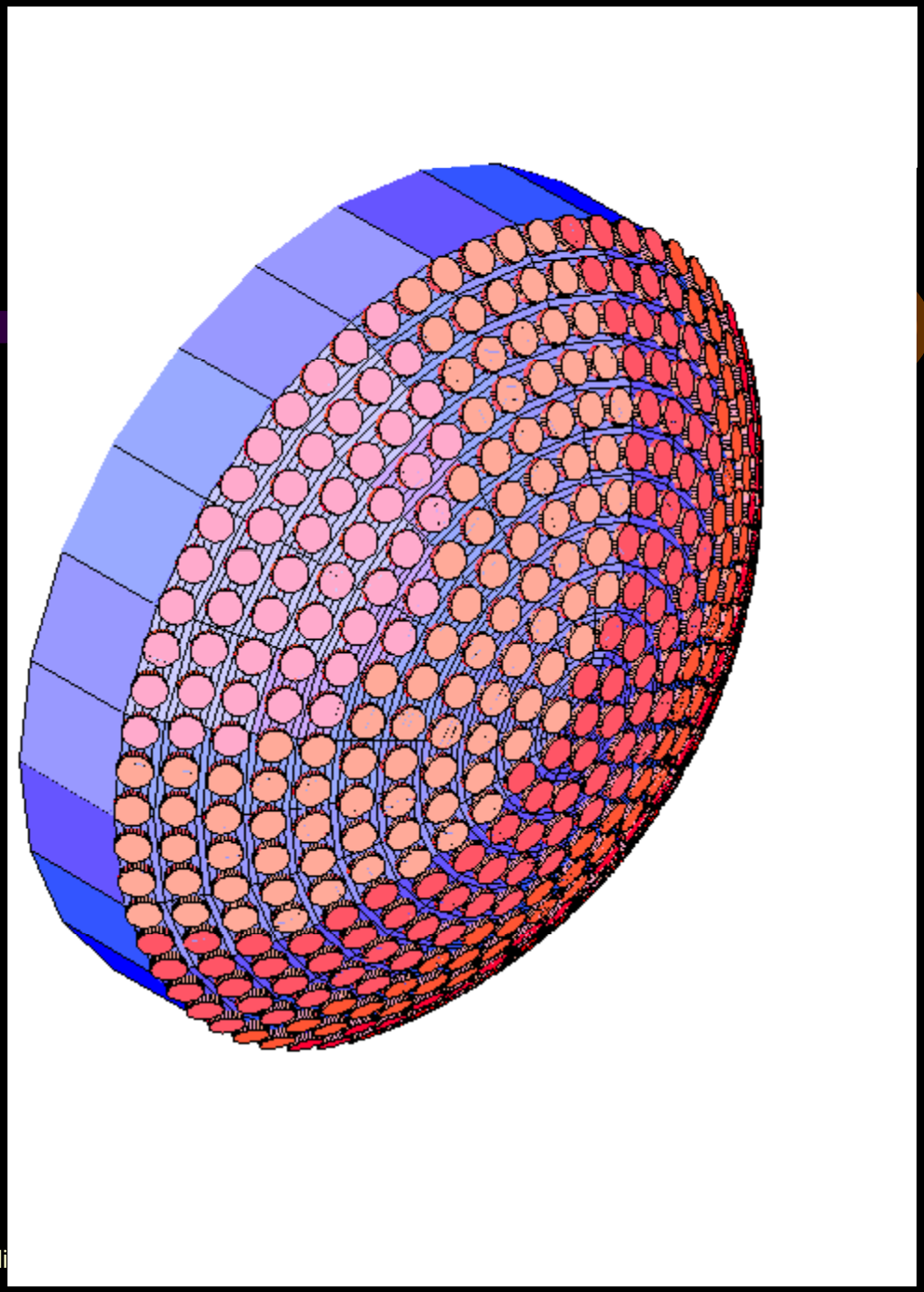

Simulation Results Cont.

- Circular Spherical Cap
  - 381 points, Legendre shading, 100°, 13.5” dia., 11 concentric rings

BEAMWIDTH

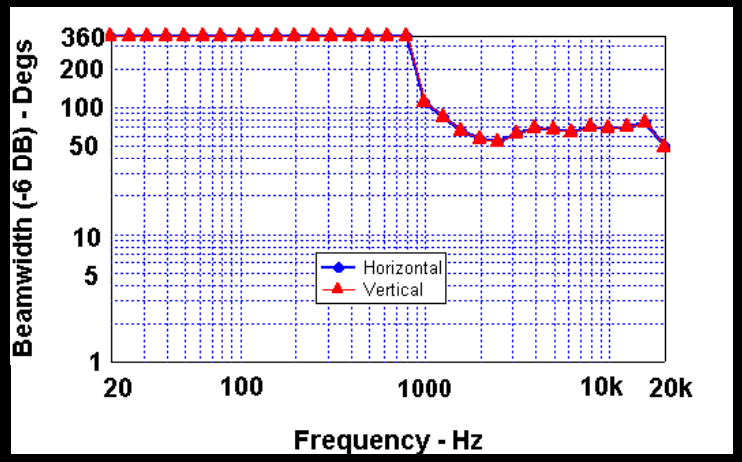

DIRECTIVITY

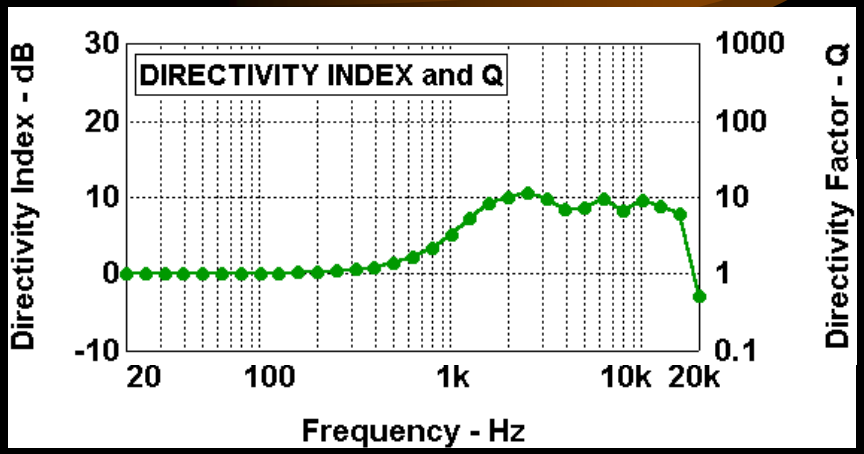

ON-AXIS LOSS

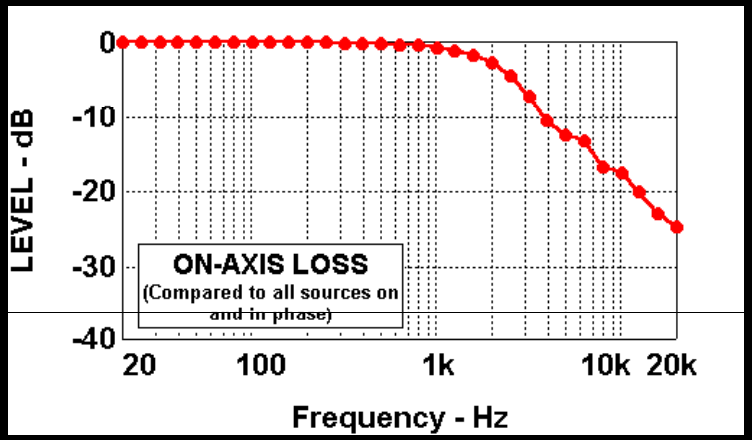

Simulation Results

- Circular Spherical Cap
  - 381 points, Legendre shading, 100°, 13.5” dia., 11 concentric rings

DATA AT 3.15 kHz

HOR. POLAR

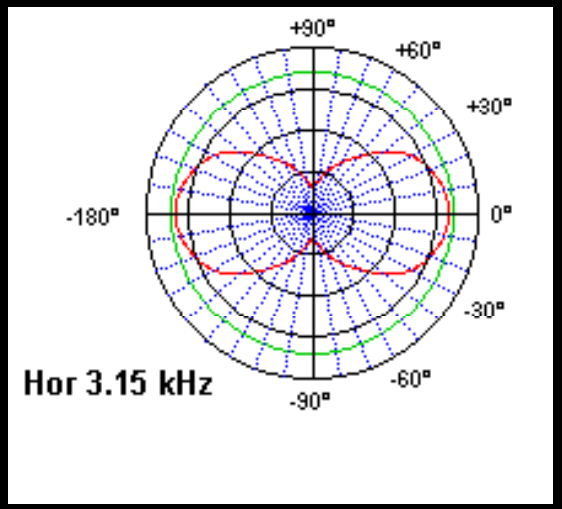

VERT. POLAR

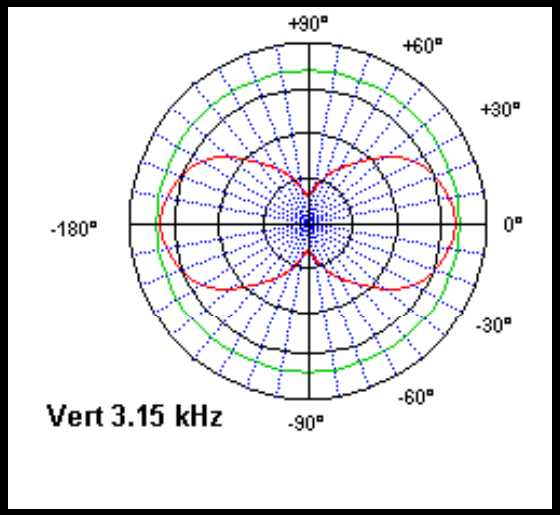

FOOTPRINT

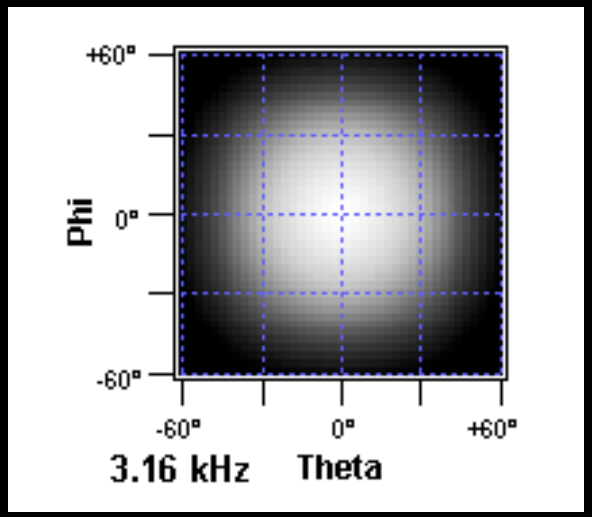

Elliptical Toriodal Cap Array

372 Sources,
100° H x 50° V,
27” H 13.5” W,
(Legendre shading)

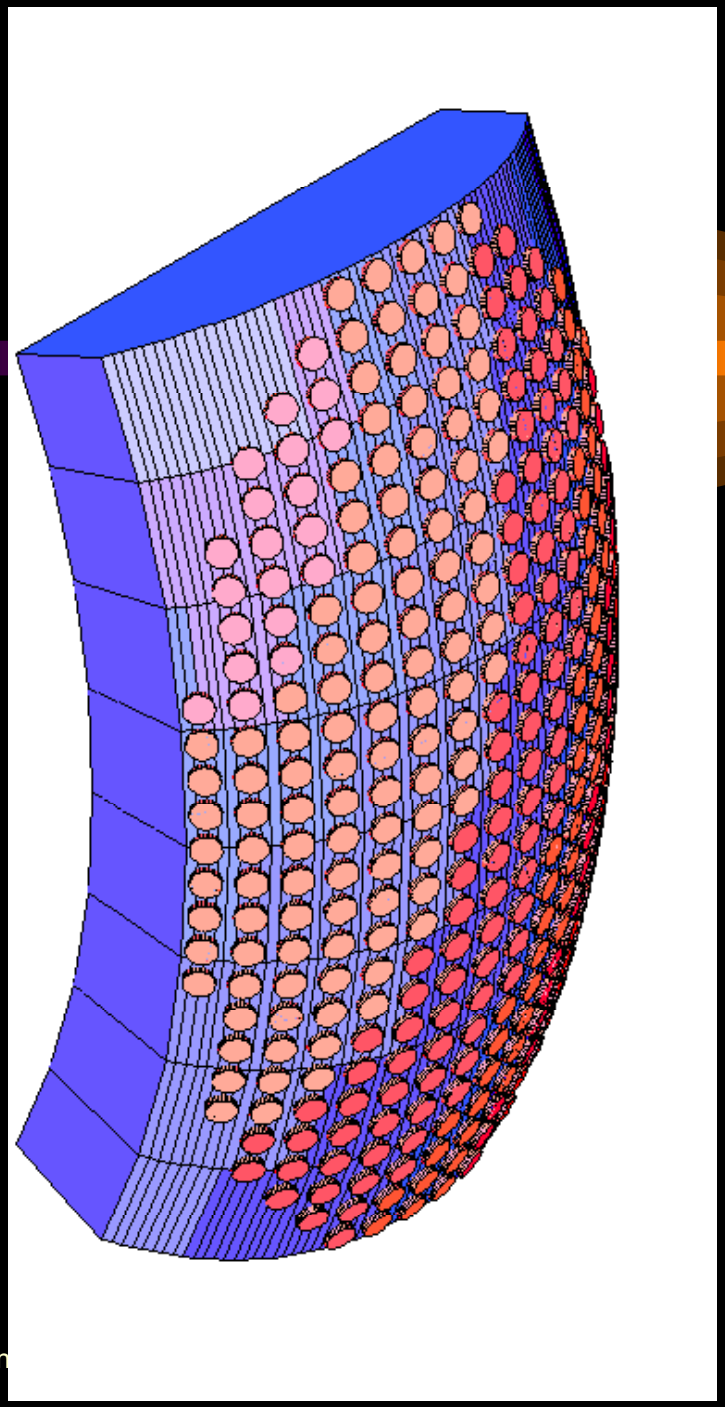

Simulation Results Cont.

- Elliptical Toriodal Cap
  - 372 points, Legendre shading, 100° H x 50° V, 27” H x 13.5” W

BEAMWIDTH

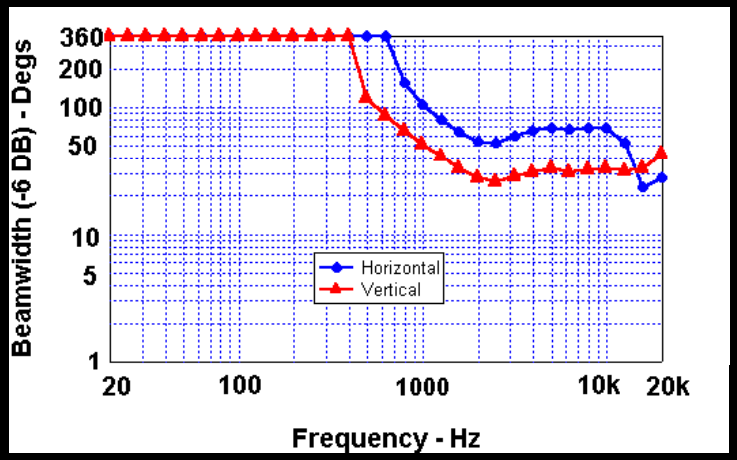

DIRECTIVITY

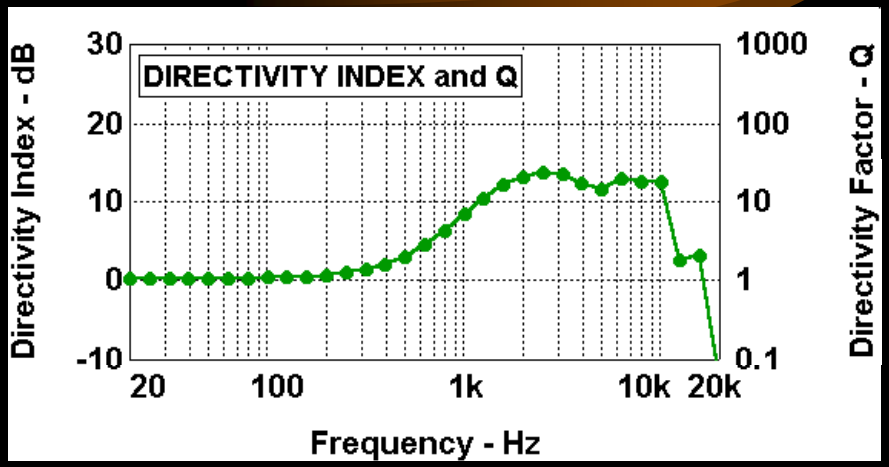

ON-AXIS LOSS

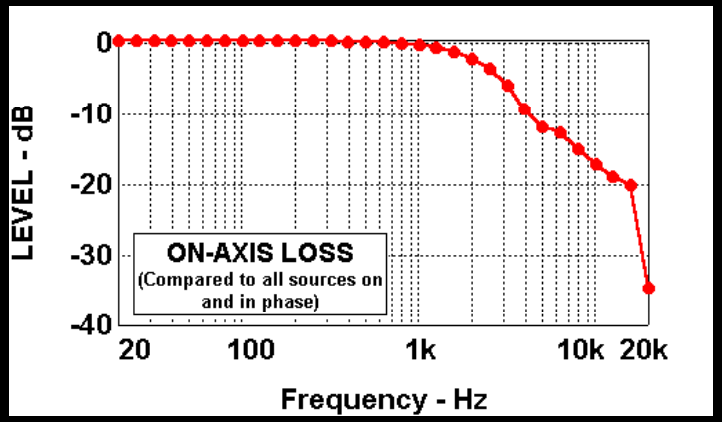

Simulation Results

- Elliptical Toriodal Cap
  - 372 points, Legendre shading, 100° H x 50° V, 27” H x 13.5” W

DATA AT 3.15 kHz

HOR. POLAR

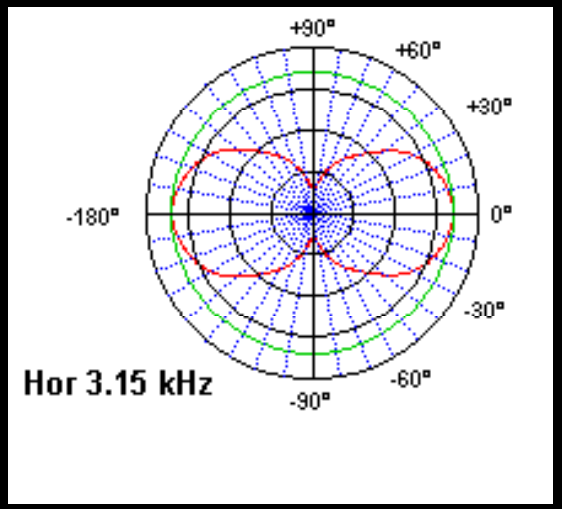

VERT. POLAR

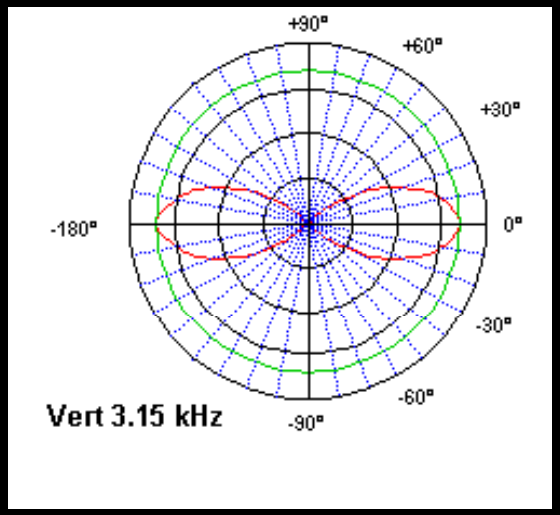

FOOTPRINT

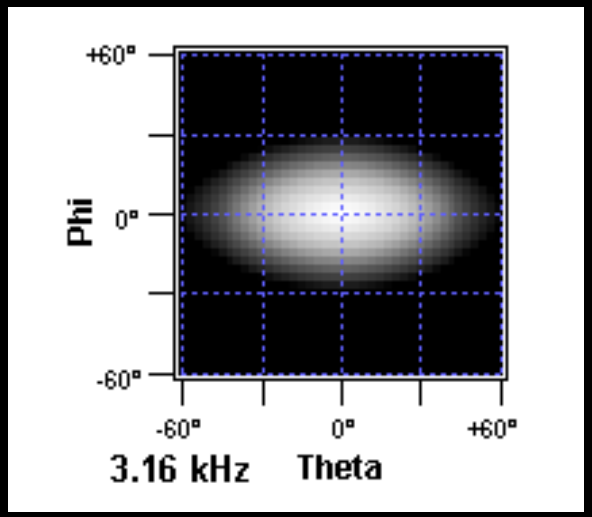

Simulation Results Cont.

- Elliptical Toriodal Cap
  - 372 points,
  - 100° H x 50° V,
  - 27” H x 13.5” W
  - Legendre shading,
- Footprints from 630 Hz (Top) to 16 kHz (Bottom)

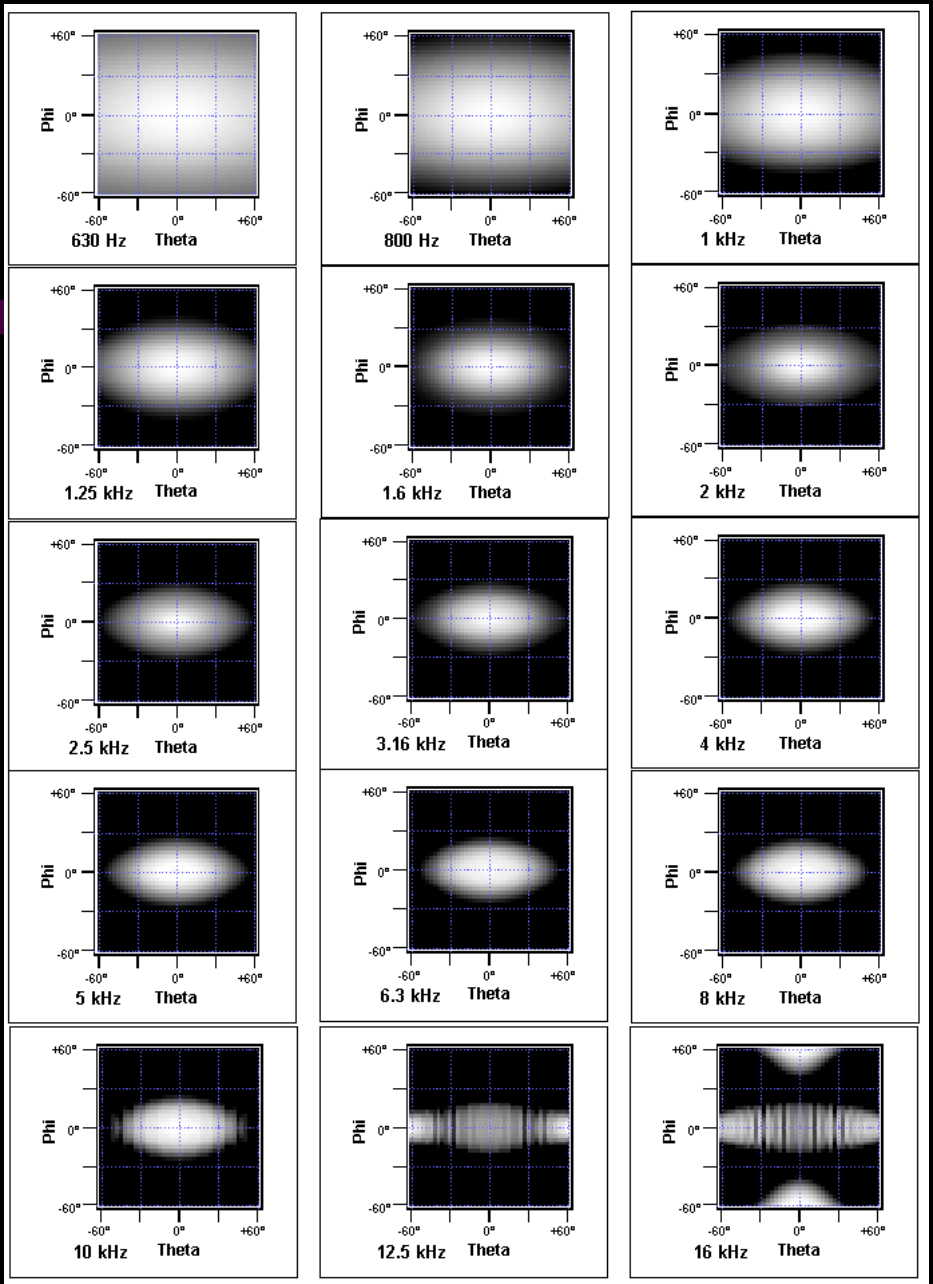

Conclusions:

- Pros
  - Nearly perfect directional characteristics
  - Nearly perfect power response and directivity control
  - Patterns do not change with distance (no nearfield)
  - Rapid rolloff of SPL with angle, high off-axis attenuation
  - Simple shading, level changes only (flat response, zero phase)
  - Can use many similar drivers, no crossover required
  - Can develop self-contained wide-band constant directivity system
  - Theory useful for arrays of larger systems
- Cons
  - Complex Enclosure and wiring
  - Lots of drivers!
  - High-frequency roll-off
  - Unequal power distribution

    (Although shading can be defeated to create a higher power system, this provides significantly less pattern control.)
- Possible Future Investigations
  - Phase response, time response, spherical steerable arrays, arbitrary pattern spherical arrays

The End:

That's All Folks….

Whew!!!!!